COPYRIGHT AND CONFIDENTIAL

The information on this document is the property of Bharat Heavy Electricals Limited.

It must not be used directly or indirectly in anyway detrimental to the interest to the company

Technical Specification
For
Design, supply and installation of
floating platform for electrical equipment for 100 MW floating solar power plant at NTPC Ramagundam (Telangana), India

Approved by : PM			
Revision details: R02 Note: Rev. 01 Text: Yellow Rev. 02 Text: Green	Prepared VKC	Issued SCPV-ENGG	Date 02.01.2020

1.0 Introduction:

Bharat Heavy Electricals Limited (BHEL), Electronics Division, Bangalore is setting up a 100 MW Grid Connected Floating Solar Photovoltaic Power Plant for NTPC at Ramagundam-Telangana. This plant has to be set up in the Raw water reservoir of the thermal plant. 500 acres of water body is available for this project. This specification describes the requirements of the floating platform for electrical equipment of the FSPV plant.

Bidder to submit the filled technical offer data sheet annexed to this specification for evaluation of technical offer.

2.0 Location / approach particulars of the power plant:

100 MW Floating Solar PV Plant shall be setup at NTPC Ramagundam by BHEL. The project site is situated at District Peddapalli of state Telangana. The Nearest Highway is NH-63(10KM). The nearest Railway Station is Ramagundam (05 Km). The nearest Commercial Airport is Hyderabad (260 Km). The area to be covered for setting up the plant is 500-600 Acres of water body. Site is a natural raw water pond for the thermal plant at NTPC Ramagundam.

Bidders have to necessarily visit the site before quoting. Bidder to give request to BHEL for arranging Site Visit. No claim regarding site conditions shall be entertained after opening of tender.

3.0 Vendor's scope of supply and Installation:

A. Supply Scope:

3.1. Design and supply of complete Floatation platforms along with accessories:

Design & Supply of Complete Floatation platforms along with all its accessories as per requirement of this specification. This design has to be approved by BHEL and End Customer-NTPC. Two types of floating platforms to be supplied along with all its accessories. One is called Inverter Floater Platform (IFP) and other is local pooling switchgear Floater Platform (LPSFP). The quantities to be supplied are as follows:

Sr. No.	Description of Floatation Platforms	No. of Platforms
1	Inverter floater Platform (IFP)	36
2	Local pooling switchgear Floater Platform (LPSFP)	04

3.2. Design and supply of Anchoring and Mooring system for the platforms, as above- 40 sets

3.3. Supply of spares and other maintenance material for above platforms (As per **manufacture's recommendation** for a life cycle of 25 years): 40 sets

B. Service Scope:

3.4. Installation and commissioning of floating platform in water body including underwater Anchoring and Mooring- 40 AU (1 AU for 1 Set of Platform and their anchoring & mooring)

3.5. AMC requirements of Platforms as per specification: 10 AU (1 AU for 1 Year)

3.6. Supervision during mounting of electrical equipment on platforms by BHEL: 1 AU (Lumpsum basis)

Note: Any other scope which is not a part of the above list, but is required for the successful establishment of the Floating Platforms is to be included in their prices as per above heads only. Loading, unloading, security, transportation etc. of all supply material from vendor shall be in vendor's scope only. BHEL shall only provide available space for storage of materials.

4.0 Enclosures to this Specification:

1. Drawing /Photographs of the Reservoir.
2. Bathymetric survey report of Water Body
3. Geo-technical Investigation Report of Water Body.
4. Tentative layout of equipment on Platform for tender purpose only.
5. Tentative Array layout

5.0 Warranty for Floating system:

Each Floater unit used in the plant must be warranted against crack, puncture, fissures, breakage, corrosion etc. for which bidder shall assure for integrity of the whole system for 25 years from date of successful completion of trial run. The fasteners/clamping arrangements, if used also has to be warranted against its sequential failure.

Vendor has to provide 10 year's warranty for his Supply BOQ and I&C of Floatation platforms and Anchoring/Mooring. In addition to above Vendor has to provide the complete installation manual for the I&C of their floatation system and the O&M requirements of this floatation system.

6.0 Details of electrical equipment which is to be floated on platform:

6.1. There are two types of floating platforms required. One is called Inverter Floater Platform (IFP) and other is local pooling switchgear Floater Platform (LPSFP). PCU's, HT panels, and Transformers are the major equipment which shall be placed on these floating platforms. Further, it has provisions of easy passage of O&M persons and cable entry/exit, as required. The typical equipment layout of both the floating platform is attached for your understanding along with approx. maximum weights of the equipment. However, actual layout and weights shall be provided along with order for design purpose.

6.2. Suitable arrangement for Embedded metallic frames, lugs etc. for welding the equipment base to the floor also has to be provided. The dimension details of the welding requirements shall be provided during detailed engineering. For IFP, provision of constructing PCC pedestals or structural steel for locating base of PCU/central Inverter 0.5 M above the platform surface for providing space for cabling. Refer PCU drawing as per annexure.

6.3. For mounting of HT Switchgear panels on LPSFP, a support stand of structural steel with 750 mm clear height above platform surface should be supplied, fabricated and installed on platforms. Same is to provide Cabling and working space below the HT panels. The stand shall be made of steel sections having Hot dip galvanized finish of 80 microns (min.). If any welding/cutting/drilling is done at site on the members during installation of stand, the HDG

surface shall be restored by applying Cold Galvanizing Zinc spray at site. Structural design analysis for the Platform considering BHEL's HT Switchgear panel weight and Site conditions such as wind, floater movements shall be furnished for approval.

Isometric view of the floating platform with stand is attached for general understanding and for designing the bottom stand and position of anchoring/embedding points on the platform for fixing the stand support legs/columns. Steps shall be provided to access the stand.

6.4. Any customization required considering base plate for transformers, HT/LT Panels, PCU & Cable etc. shall be done by the bidder as per requirement of BHEL/Customer during drawing approval.

7.0 Detailed specification of Floating Platform:

7.1. General Requirements:

a. The floating platforms shall be suitable for operation in inland waters. The platforms shall be designed and built in accordance with the requirements of the rules and regulations of IRS (Indian Register of Shipping) or any Classification Society who is member of International Association of Classification Society (IACS) or Reputed Institutes like IITs, technical universities etc. or an accredited naval Architecture Firm, as applicable.

b. The platforms built can be tested by Indian Registry for stability, tilt angle, buoyancy, trim and freeboard etc. The original certificates with three copies shall be handed over prior to delivery of platforms.

c. The working life of the platforms shall be minimum 25 years, the life expectancy to be certified by the applicable Inspecting agency.

d. All costs and fees for inspection and approval of Class and Regulation Bodies for the necessary certificates shall be borne by the bidder only.

e. Any material/ fitting/ equipment or procedure not described or left out of these specifications, but considered as normal and necessary for intended services of these platforms shall be supplied and fitted by the vendor without any extra charge.

f. The platform is to be stationed at different locations in the reservoir as per the requirement of the project. If required, these platforms may need to be moved from its stationed location to bank of the reservoir and back for major maintenance activity of the equipment. Suitable provisions shall be given for the movement of the platforms. The procedure for movement of platform shall be submitted to BHEL.

g. The platform should have suitable mooring arrangements along with anchors to be provided for sustaining the conditions given in specification. Detailed design and calculation in this regard to be prepared and same to be approved by BHEL/Customer/customer's consultant before installation. The winches, anchor chain, mooring ropes, shackles etc. shall be as per the class requirement. The requirement of mooring at shore with appropriate arrangement through steel wire rope of adequate dia. shall also be provided.

7.2. Design of Floating Platforms:

a. The platform should be designed to withstand minimum **twice the imposed load** as specified in this technical specification.

b. The floating platform, all accessories and anchoring system shall be designed for base wind speed of 158.4 km/hr.

c. Reservoir details:
Full reservoir Level (FRL):168 M
Minimum Drawdown Level (MDDL):162.30 M
Depth of water: Approx. 10-12 Meters.
Wave Height: 1 Meter

The bathymetric survey report as well as the geotechnical investigation report of water body is attached for reference.

d. Following shall also be considered in designing the floating platforms:

Draft (In loaded Condition): As per Manufacturer's design.

Safe heel angle: 3°

Extreme heel angle: 10°

Freeboard (In Actual Loaded Condition): Minimum 0.5 M

Freeboard (In designed Loaded Condition i.e. twice of imposed load): Minimum 0.20 M

Detailed structural design calculations, three dimensional analysis, CFD along with manufacturing drawings shall be prepared and same to be approved by BHEL/Customer/customer's consultant before start of manufacturing.

7.3. Material and workmanship:

The floating platform shall be made of **steel/HDPE/FRP or precast or cast in-situ fixed platform.**

The material may be chosen for the working life of 25 years and have a high Resistance to Impact, De-gradation, Chemicals, UV rays, corrosion etc. Further, the offered material shall fulfill all the requirement of this specification. The details of material offered shall be submitted along with technical offer.

Steel may be mild steel of IS 2062 E250 Grade B or Stainless Steel.

In case of HDPE, use of re-cycled material shall not be accepted. Proof of purchase of virgin material to be submitted. Applicable test certificate from approved laboratory to be submitted. Vendor shall propose the physical parameters of the materials proposed along with the technical offer.

Precast or cast in-situ fixed platform may be of concrete or Ferrocement.

All materials, equipment, and other necessary fittings used shall be new and of very good marine quality.

All Fasteners, connecters, fittings and linking arrangements of platforms should be of an approved standard.

Handrails of Stainless steel (SS304) of minimum 1 M height should be provided all around the floating platform. Step ladder for access from boat or land with handrail to the platform shall also be provided.

The Raw material test certificates, as applicable shall be submitted along with supply and at the time of Pre-Shipment Inspection(s).

Manufacturing: In case of steel, the platforms shall be of all welded steel construction. Welding shall be of high quality, and shall be performed by Classification Society approved personnel. Welding procedures shall be in accordance with the rules and regulations of Class. Necessary precautions shall be taken to eliminate deformations.
In case of material other than steel, the suitable manufacturing process accordance with the rules and regulations of Class shall be adopted.

7.4. Size and Load requirements of the floating platform:

7.4.1. There are two types of floating platform required. One is called Inverter Floater Platform (IFP) and other is local pooling switchgear Floater Platform (LPSFP). The minimum size of Platforms are as follows:

Size of IF: 15 M X 8 M (Usable Surface Area 120 SqM)

Size of LPSFP: 30 M X 8 M (Usable Surface Area 240 SqM).

Note: The above size is minimum requirement for the platforms. Bidder can quote higher sizes than the above requirement as per their design and manufacturing capabilities. However, no additional price will be paid for quoting higher sizes of platform. LPSFP may be divided into two platforms of sizes 18 M X 8 M and 12 M X 8 M. However, proper arrangement of connection between these two platform to be ensured with minimum gap as this shall be used as a single platform only. For quoting prices also, these platforms shall be considered single only.

7.4.2. The Height of electrical equipment on the platform above top surface are as follows:
PCU: 3.5 M
Transformers: 3.5 M
HT Panel: 2.8 M

7.4.3. The approx. maximum weight of Electrical equipment on the platform above top surface are as follows:
PCU: 6 MT
Transformer: 9 MT
HT Panel: 2 MT

The major weight concentration of transformers is at 1/2 to 1/3 height from bottom whereas for PCU and HT Panel it is at bottom of the equipment.

7.4.4. Adequate space shall be provided for handling of equipment and movement of personnel and load of the same shall be considered suitably in design of platforms.

7.4.5. For mounting of HT Switchgear panels on LPSFP, a support stand of structural steel with 750 mm clear height above platform surface should be supplied, fabricated and installed on platforms. The weight of this structure shall also be taken care during load calculation for design.

7.4.6. The platforms should be designed to withstand minimum **twice the imposed load** as specified in this technical specification.

7.5. Design and supply of Anchoring and mooring system

a. The design life of the Anchoring system shall be **25 years**.

b. The floating platform and associated anchoring system shall be designed as per base wind speed as given above and able to withstand dynamic conditions as per IS 875-3.

c. The design of the mooring system shall permit minimal lateral movement of the plant in case of maximum wind loads (as per IS 875-3).

d. Anchoring design report for the project showing that the system could support the maximum wind load on site shall be submitted to NTPC.

e. Water variability: The mooring system should accommodate any fluctuations in water level. Further, the orientation of the equipment needs to be maintained; hence, any fluctuations in water level shall allow minimal movement of the electrical equipment as per mooring system design.

f. The materials used in the anchoring system shall not contaminate the water and affect the aquatic ecosystem.

g. The design of complete system, including CFD modelling, comprising of Floating unit and anchoring system, shall be verified by suitable third party NABL accredited agency/ reputed institutions like IITs, technical universities etc. and submitted for NTPC's approval.

h. Detailed structural and stability calculations shall be submitted for BHEL/NTPC approval.

7.6. Painting and Preservation:

Metal based platforms have to be painted/preserved to withstand severe atmospheric corrosion conditions. The platforms shall be designed/painted/preserved for the corrosion category C4 of BS EN ISO 12944-2. **No re-painting of the platforms shall be allowed up to 25 years**, hence for any type of corrosion, Suitable corrosion prevention mechanism shall be provided. The bidder has to provide warranty against corrosion for minimum 25 Years.

In case of mild steel, the platform is to be cleaned of mill-scale by blast cleaning and coated with an approved high quality marine primer prior to fabrication also. After Fabrication, high quality marine grade paint with sufficient no. of coats shall be applied for corrosion resistance in water for minimum life of 25 years.

Paint specifications and Painting scheme are to be submitted for approval by the BHEL/End Customer before start of any painting works. Primer and Paints of approved make by BHEL/End Customer shall only be used for painting of platforms. Certification from paint manufacturer regarding corrosion resistance capability of the paint for a life of 25 years to be submitted with painting scheme.

After installation of equipment, auxiliaries etc. damaged paint work is to be repainted in original colours and quality. Painting work shall be executed in accordance with paint manufacturer's recommendations. Copper alloy, aluminium, aluminium alloy, stainless steel, non-ferrous materials and galvanized surfaces shall not be painted unless otherwise specifically required.

Non-slip paint is to be applied on the main deck open areas, as applicable.

7.7. Quality Requirements:

The IRS/ Appropriate Classification society shall approve the design before commencement of the manufacturing. The cost of the same shall be borne by the bidder. Quality and Inspection check while manufacturing shall be certified by the IRS/ Appropriate Classification society.

Vendor to submit the MQP (for Supply) and FQP (For I & C) of the Floatation platform and mooring & anchoring system for approval of BHEL/Customer. The MQP and FQP to essentially take care of all the criteria as listed in the technical requirements of this specification.

Vendor shall indicate the contact addresses of any special Test labs or Institutions where the component/ building materials or samples of the Floating platforms are to be sent for carrying out any validation or analysis.

A suitable testing procedure to check for water-tightness is to be prepared and submitted to BHEL for approval as a part of MQP. The tests must be carried out after the completion of manufacturing and before painting, if applicable.

7.8. Test reports

Pre-Shipment Inspection (PSI) Call should accompany the following reports:

1. Raw Material test certificates
2. Internal inspection report as per approved MQP and FQP.
3. Photographs of the offered lot.

BHEL- EDN will go through the reports and depute personnel for PSI.

PSI to be by BHEL/TPI/Customer (NTPC).

Before dispatch of material BHEL/NTPC may carry out required tests on random samples of Raw Material from the NABL accredited testing lab for Raw Material chemical properties, Mechanical properties etc. The cost towards all these tests shall be borne by vendor.

7.9. List of applicable Standards:

The floatation system must conform to the latest edition of IEC/equivalent standards for floating system design qualification and type approval, as applicable. The reports verified by third party NABL national or international accredited agency shall be submitted for approval to BHEL/NTPC.

Indian codes, and/or standards shall govern, in all the cases wherever they are available. In case of a conflict between such codes and/or standards and the specifications, the stringent provisions shall govern. Such codes and/or standard referred to shall mean the latest revision, amendments/changes adopted and published by the relevant agencies. In case of any further conflict in this matter the same shall be referred to the Engineer-In-charge, whose decision shall be final and binding.

Other internationally acceptable standards shall be accepted, only if, no Indian Standards are existing.

8.0 Annual Maintenance Contract (AMC) Requirement:

Vendor has to furnish AMC for 10 years from the date of successful installation of the floating platform. This AMC shall include the following:

a. Attending to and resolving any breakdown/fault of the floatation platform.

b. Mandatory one half yearly visit for the first 3 years to assess the floating platform for any failure or any sign which may lead to subsequent failure. Vendor to send the assessment report to BHEL through email.

c. 1 visit annually from fourth year till the end of tenth year. Vendor to send the assessment report to BHEL through email.

d. All payments towards AMC to be paid after submission of assessment report only.

Vendor to clearly indicate the AMC requirements of floating platform. Vendor to provide the O&M manual to BHEL.

9.0 Supply of spare parts and other maintenance materials:

The spare parts and other maintenance materials, as required for standard wear and tear of the planforms & their accessories including anchoring and mooring system to be supplied as per manufacturer's recommendations. A list of recommended spares and other maintenance materials for 25 years of life along with its approximate quantities shall be submitted by the bidder along with their technical offer. However, in case any new spare parts required in this duration for maintenance of the system which is not recommended by the bidder, the bidder will supply the same free of cost to BHEL.

10.0 Installation and commissioning of floating platform in water body including Anchoring and Mooring:

10.1. Bidder to Install the floating platform at site. The procedure/methodology of anchoring, mooring and installation and commissioning of platforms shall be submitted for approval to BHEL/End Customer before start of I & C.

10.2. Motorised boat and Jetty required for anchoring, mooring, installation and commissioning of platforms shall be arranged by Bidder only. BHEL will not provide any tools, plant and machinery for installation and commissioning activities of platforms.

11.0 Supervision during mounting of electrical equipment on platforms by BHEL:

11.1. Placing of electrical equipment on to the platforms shall be done by BHEL's E & C contractor at site under close supervision and direction of floater manufacturer. Items shall be placed onto the platform stationed close to land and after loading the floating platform shall be towed to the designated location by BHEL's E&C vendor.

11.2. Bidder to provide instructions for installation of electrical equipment onto the platform.

11.3. Supervision shall be done in such a way that no re-installation/modification occurred in placement of equipment later.

12.0 Guidelines to the bidder to be followed during I & C of Floating Platforms including anchoring and mooring:

A. General Guidelines:

12.1 The work shall be executed in the premises of NTPC Ramagundam, hence rules and regulations pertaining to entry of manpower in their premises shall be binding on the bidder.

12.2 The bidder will have to indemnify BHEL against all claims for injury or damage to any person or property caused by his negligence of his employees whilst in NTPC premises, Observance of Labor & Industrial Laws, including regular remittance to EPF and ESI, All claims by way of compensation and all other types of unforeseen claims, which may arise in the period of I &C.

12.3 The Contractor will accept liability for compensation in accordance with the provision of the Indian Worker's Compensation Act, 1948, amendments thereafter and or other law for the time being in force for personal injury caused to any workmen by accident arising out of and in the course of I &C.

B. Safety Guidelines:

12.4 The contractor has to assume full responsibility of the safety of the vehicles/ equipments/ manpower and to comply with the security/ safety regulations of BHEL/NTPC, as applicable, while working at site. The total safety of operation and laborers is bidder's responsibility.

12.5 Bidder should provide Personnel Protective Equipment (PPE) and Consumables, as applicable, to each laborer during execution of the I &C, at his own cost. The Biddder and his workers must strictly take all safety precautions and shall supply to his workers dependable safety appliances like life jackets, hand gloves, safety boots, safety belt, safety helmets, duster cloth, dust mask/nostril filter etc., as applicable.

12.6 Safety Clearance from NTPC to start I &C will be obtained by the bidder.

12.7 Rescue boat with minimum 4 nos. lifejackets and trained swimmer shall be deployed on continuous basis during entire period of I & C. Underwater jobs entailing diving, underwater anchoring, placement etc. shall be carried out only by certified scuba divers/workmen. All diving gears shall be tested and certified by qualified person at the site for each diver.

12.8 One qualified safety officer shall be deployed during entire I & C period.

13.0 General conditions applicable during supply, installation and commissioning including anchoring and mooring:

13.1. Sufficient land space is available at site along with waterside of the reservoir. In case any vendor wants to do fabrication/construction activities at site, that space can be given to them. However, vendor need to develop the site (Clearance of shrubs, levelling, grading etc. for working including making access path from main road for transportation) as per their requirement. BHEL will not provide any resources for the site development. On completion of work, the site shall be cleaned by the vendor of all materials, temporary debris, rubbish plants and equipment's, belonging to the vendor at no extra cost. The site and surroundings shall be handed over in a neat and clean condition. In case of any failure by the vendor, the employer will get site cleared at risk and cost of the vendor.

13.2. Vendor shall organize construction power supply on their own. Accordingly, if required, DG sets of suitable capacity shall be deployed by the vendor for construction works. Alternatively, vendor may arrange temporary power supply connection from local electric supply body after due formalities.

13.3. Similarly, water required for construction works shall be organized by vendor. Vendor shall organize bore wells at the site if required. In case bore well is not successful, vendor shall make their own alternate arrangements (water tankers etc).

13.4. All machinery such as cranes, hydra, JCBs, forklifts, transport trucks, trolleys, concrete mixers, Ajax machines etc necessary for movement and installation of materials shall be organized by the vendor.

13.5. All necessary tools and tackles such as screw driver set, power screw drivers, cutting pliers, nose pliers, spanner sets, adjustable spanners, hole saw cutter set, bending tools, torque wrenches, hack saw blades, pipe wrenches, flat / round files, drilling machines, welding machines, steel bar bending tools / templates for RCC works, spade, shovel, hammer etc shall be organized by the vendor.

13.6. All necessary measuring instruments such as measuring tapes, spirit levels etc. shall be organized by the vendor.

13.7. Vendor shall make their own arrangements for necessary food, drinking water and accommodation for their labour and employees posted at the site. Similarly, food and drinking water required at the site, during the construction operations, shall also be in scope of vendor.

13.8. Vendor shall organize all necessary steps to meet statutory requirements such as labour license, PF, ESI, insurance etc. and also ensure compliance with relevant acts such as minimum wages act, income tax act, employee insurance act, BOCW act etc. for their labour deployed at site.

13.9. Vendor shall organize activities such as receipt of all supply items of platforms at site, unloading from the trucks, safe storage at site, movement from storage location to point of construction etc. Vendor shall deploy their own security watch and ward to safeguard their supply items from pilferage. Insurance for the supplied items until the completion of erection of all the platforms shall be the responsibility of vendor.

13.10. Vendor shall maintain updated labour register, with name, age, qualification, salary, attendance details etc at the site.

13.11. Vendor shall use danger boards, wherever required, to ensure safety of the persons during the work at site.

13.12. Vendor shall adhere to all necessary safety norms such as use of helmet, goggles, hand gloves, gumboots, aprons etc. It is the ultimate responsibility of the vendor in all respect to prevent accidents at the site and safeguard their labour from accidents.

13.13. Vendor shall, at the completion of every work, clear off the debris, which resulted out of their work.

13.14. Vendor shall carry out the work without causing inconvenience to other contract groups at the site. In case of conflicts with other groups, vendor shall ensure that the matter is resolved at once amicably so that the progress of work is not affected.

13.15. Any damages on the other buildings, structures etc. of the site, if attributable to the acts of labour / employees of vendor, shall be rectified and made good by the vendor at their own cost.

13.16. No child labour shall be employed for execution of the present contract.

13.17. Any miscellaneous materials, which are found essential for technical completion of the contract but not mentioned explicitly in this specification, shall be deemed to be included in the specification. Accordingly, such materials shall be included by the vendor as part of the offer.

13.18. BHEL / End customer shall witness routine / acceptance tests performed at manufacturer works for the items supplied by vendor. Vendor shall accordingly provide inspection call to BHEL with submission of quality assurance plan in advance.

13.19. For the items bought out from dealers, test certificates, as per relevant IS / IEC standards, as issued by manufacturer shall be submitted to BHEL. However, prior approval shall be obtained from BHEL/ End customer for procurement of the item from dealers.

13.20. Field Quality Plan / Quality control system: Vendor shall make arrangements for testing of all construction materials in accordance with FQP (Field quality control plan) as approved by BHEL/ End customer. If required for this purpose, an exclusive testing laboratory shall be established at site. Vendor shall deploy a well experienced quality control engineer to monitor all QC activities at site as per approved FQP.

13.21. Any deviations during construction shall be discussed with BHEL / End customer site engineers and implementation shall be taken up only after approval from BHEL / End customer.

13.22. Vendor shall submit periodic status report, on daily as well as weekly consolidated basis, to BHEL on the progress of the contract.

14.0 Completion Schedule:

Sr. No.	Activity	Time Schedule
1	Submission of detailed design document of platform, methodology of manufacturing, Anchoring & mooring design, Manufacturing Quality Plan (MQP), Filed Quality Plan (FQP) for Anchoring & mooring, paint specification & painting scheme, as applicable along with all drawings for approval of BHEL/End customer	2 Weeks from date of PO
2	Supply of platforms	Completion in 32 Weeks from the date of approval of design and drawings by BHEL/End Customer. Staggered supplies to be planned for each lot of 9 IFP and 1 LPSFP.
3	I & C of Platforms including anchoring and mooring at site	8 weeks from date of receipt of material at site
4	Supervision during mounting of electrical equipment on platforms by BHEL	As per requirement of BHEL

****

ANNEXURE-A

TECHNICAL OFFER DATA SHEET

(To be filled and submitted along with Technical offer)

Sl. No.	Description	Please Fill	
1	Name of the Firm (Bidder)		
2	Address of the Firm (Registered Office)		
3	Name of Contact Person		
4	Contact Numbers		
5	Email ID		
Sl. No.	**Description**	**Status/Data Submitted**	**Remarks (Attach annexure wherever required)**
1	Type of Material of the floating platform offered	Submitted/Not submitted	Type of material and their details like chemical/mechanical properties, details of its suitability to marine application to be submitted.
2	Confirmation of site visit	Submitted/ Not submitted	Vendor has to necessarily visit the site before quoting. A declaration regarding visit of site on bidder's letter head to be submitted.
3	Size of IFP offered		To be filled here
4	Size of LPSFP offered		To be filled here. If divided, the details of offered sizes to be mentioned.
5	Certification Authority for approval of design and built, as applicable		The details of Certification Authority for approval of design and built, as applicable to be mentioned
6	Confirmation of acceptance of Technical specification	Submitted/ Not submitted	Sealed and signed copy of BHEL tender technical specification to be submitted.
7	List of spares and other maintenance material	Submitted/ Not submitted	List of spares and other maintenance materials for above platforms as per manufacture's recommendation for a life cycle of 25 years to be submitted

COPYRIGHT AND CONFIDENTIAL
THE INFORMATION ON THIS DOCUMENT IS THE PROPERTY OF BHARAT HEAVY ELECTRICALS LTD. IT MUST NOT BE USED DIRECTLY OR INDIRECTLY IN ANY WAY DETRIMENTAL TO THE INTEREST OF THE COMPANY.

DRG. No.

Inverter Floater Platform (IFP)
-Qty:36Nos

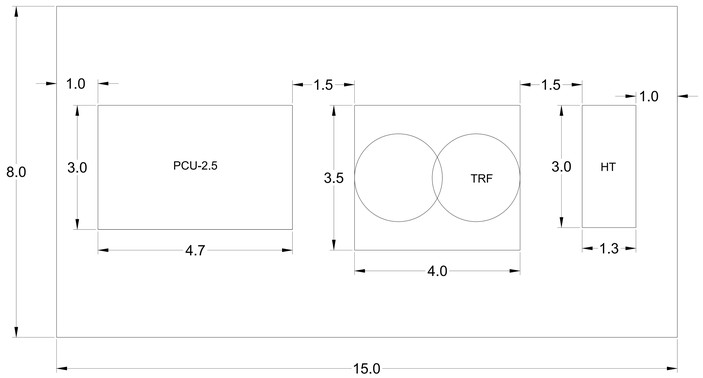

Local Pooling Switchger Floater Platform (LPSFP)
-Qty:4 Nos

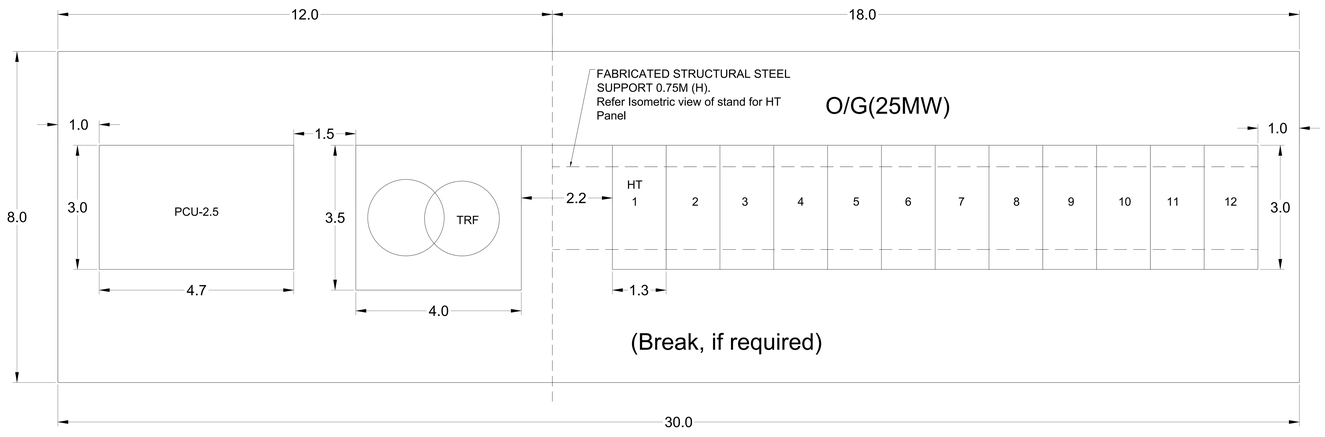

NOTE:
1.TRANSFORMER WEIGHT -9T
2.PCU WEIGHT -6T
3.HT PANEL WEIGHT-2T
4.TRANSFORMER HEIGHT -3.5M
5.PCU HEIGHT -3.5M
6.HT HEIGHT -2.8M

PROJECT: 100MW (AC) FSPV
CUSTOMER: NTPC, RAMAGUNDAM

REV.	DATE	ALTERED / CHECKED / APPROVED	REV.	DATE	ALTERED / CHECKED / APPROVED

	NAME	SIGN	DATE
DRAWN			
CHECKED			
APPROVED			

DISTRIBUTION OF PRINTS

DEPT.	CODE

BHARAT HEAVY ELECTRICALS LIMITED.
ELECTRONICS DIVISION, BANGALORE

TITLE: FLOATING PLATFORM FOR ELECTRICAL EQUIPMENT
EQUIPMENT LAYOUT (TENTATIVE)

No. OF SHEETS	
SHEET No.	
REV	02

All Dimension in Meter

BHEL DRG. No.

REF. DRG. No.
SIGN. & DATE
INVENTORY No.

TECHNICAL CORREGENDUM-2

Date: 02.01.2020

Reference: RFQ No. TGPBOS0050 dated 10.12.2019 (E-Tender)

1. TECHNICAL SPECIFICATIONS:

With reference to RFQ, the technical specification PS-439- 1319 and drawings are revised. Major changes are as below:

Clause ref.	PS-439- 1319 Rev. 01	PS-439- 1319 rev. 02	Remark
7.2 d	Freeboard (In loaded Condition): Minimum 0.5 M	Freeboard (In Actual Loaded Condition): Minimum 0.5 M Freeboard (In designed Loaded Condition i.e. twice of imposed load): Minimum 0.20 M	Freeboard conditions Clarified
7.4.1	Size of LPSFP: 27 M X 8 M (Usable Surface Area 216 SqM).	Size of LPSFP: 30 M X 8 M (Usable Surface Area 240 SqM).	LPSFP size changed due to change in size of PCU.
7.4.1 note	LPSFP may be divided into two platforms of sizes 18 M X 8 M and 9 M X 8 M.	LPSFP may be divided into two platforms of sizes 18 M X 8 M and 12 M X 8 M.	Due to increase in platform size, the break-up size changed, if required
7.4.2	Height of PCU: 2.5 M	Height of PCU: 3.5 M	Revised as per Drawing

Vendors are requested to go carefully to the revised specification and quote accordingly.

All other terms and conditions of tender enquiry however remains same.

****

CORPORATE QUALITY ASSURANCE
SUB-VENDOR QUESTIONNAIRE

i.	*Item/Scope of Sub-contracting*			
ii.	*Address of the registered office*	*Details of Contact Person (Name, Designation, Mobile, Email)*		
iii.	*Name and Address of the proposed Sub-vendor's works where item is being manufactured*	*Details of Contact Person: (Name, Designation, Mobile, Email)*		
iv.	*Annual Production Capacity for proposed item/scope of sub-contracting*			
v.	*Annual production for last 3 years for proposed item/scope of sub-contracting*			
vi.	***Details of proposed works***			
1.	*Year of establishment of present works*			
2.	*Year of commencement of manufacturing at above works*			
3.	*Details of change in Works address in past (if any)*			
4.	*Total Area*			
	Covered Area			
5.	*Factory Registration Certificate*	*Details attached at Annexure – F2.1*		
6.	*Design/ Research & development set-up (No. of manpower, their qualification, machines & tools employed etc.)*	*Applicable / Not applicable if manufacturing is as per Main Contractor/purchaser design) Details attached at Annexure – F2.2 (if applicable)*		
7.	*Overall organization Chart with Manpower Details (Design/Manufacturing/Quality etc)*	*Details attached at Annexure – F2.3*		
8.	*After sales service set up in India, in case of foreign sub-vendor (Location, Contact Person, Contact details etc.)*	*Applicable / Not applicable Details attached at Annexure – F2.4*		
9.	*Manufacturing process execution plan with flow chart indicating various stages of manufacturing from raw material to finished product including outsourced process, if any*	*Details attached at Annexure – F2.5*		
10.	*Sources of Raw Material/Major Bought Out Item*	*Details attached at Annexure – F2.6*		
11.	*Quality Control exercised during receipt of raw material/BOI, in-process , Final Testing, packing*	*Details attached at Annexure – F2.7*		

12.	***Manufacturing facilities*** ***(List of machines, special process facilities, material handling etc.)***	***Details attached at Annexure – F2.8***
13.	***Testing facilities*** ***(List of testing equipment)***	***Details attached at Annexure – F2.9***
14.	***If manufacturing process involves fabrication then-*** ***List of qualified Welders*** ***List of qualified NDT personnel with area of specialization***	***Applicable / Not applicable*** ***Details attached at Annexure – F2.10*** ***(if applicable)***
15.	***List of out-sourced manufacturing processes with Sub-Vendors' names & addresses***	***Applicable / Not applicable*** ***Details attached at Annexure. –F2.11*** ***(if applicable)***
16.	***Supply reference list including recent supplies***	***Details attached at Annexure – F2.12*** ***(as per format given below)***

Project/ package	*Customer Name*	*Supplied Item (Type/Rating/Model /Capacity/Size etc)*	*PO ref no/date*	*Supplied Quantity*	*Date of Supply*

17.	***Product satisfactory performance feedback letter/certificates/End User Feedback***	***Attached at annexure - F2.13***
18.	***Summary of Type Test Report (Type Test Details, Report No, Agency, Date of testing) for the proposed product (similar or higher rating)*** ***Note:- Reports need not to be submitted***	***Applicable / Not applicable*** ***Details attached at Annexure – F2.14*** ***(if applicable)***
19.	***Statutory / mandatory certification for the proposed product***	***Applicable / Not applicable*** ***Details attached at Annexure – F2.15*** ***(if applicable)***
20.	***Copy of ISO 9001 certificate*** ***(if available)***	***Attached at Annexure – F2.16***
21.	***Product technical catalogues for proposed item (if available)***	***Details attached at Annexure – F2.17***

Name:		***Desig:***		***Sign:***		***Date:***	

Company's Seal/Stamp:-