FIRST ANGLE PROJECTION

ALL DIMENSIONS ARE IN mm.

DRG No. 3 987 05 32121 REV 00

THE INFORMATION ON THIS DOCUMENT IS THE PROPERTY OF BHARAT HEAVY ELECTRICALS LIMITED., IT MUST NOT BE USED DIRECTLY OR INDIRECTLY IN ANY WAY DETRIMENTAL TO THE INTEREST OF THE COMPANY

REF. DRG. No.

SIGN AND DATE

INVENTORY No.

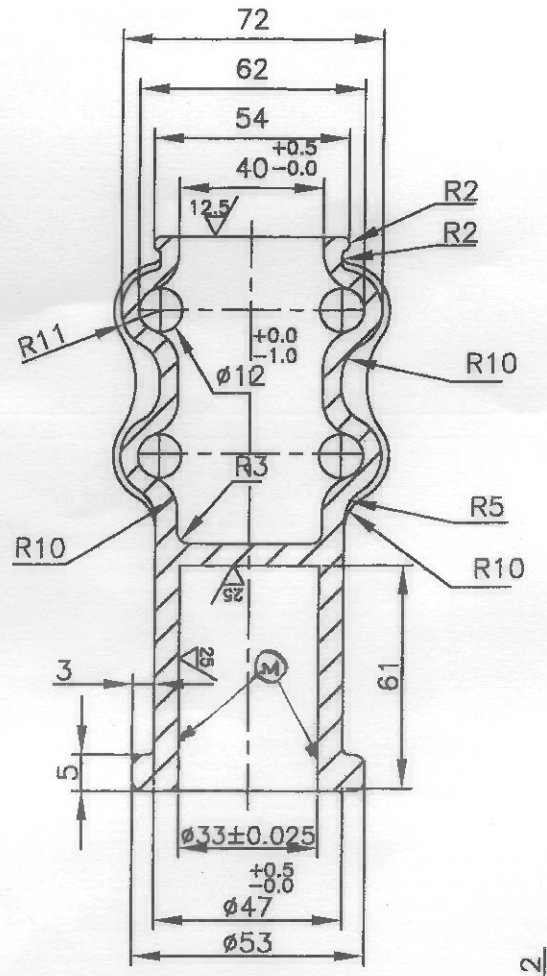

SECTION 'A–A'

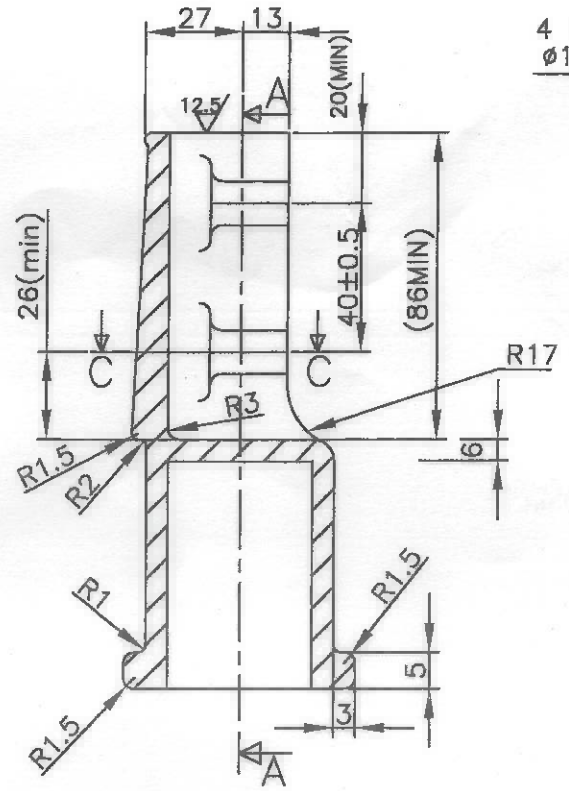

SECTION 'B–B'

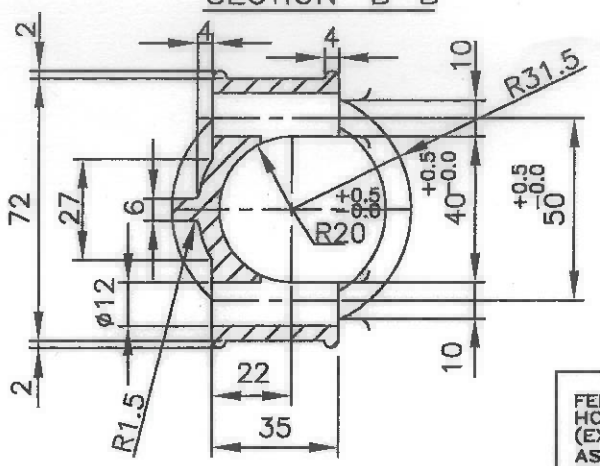

SECTION 'C–C'

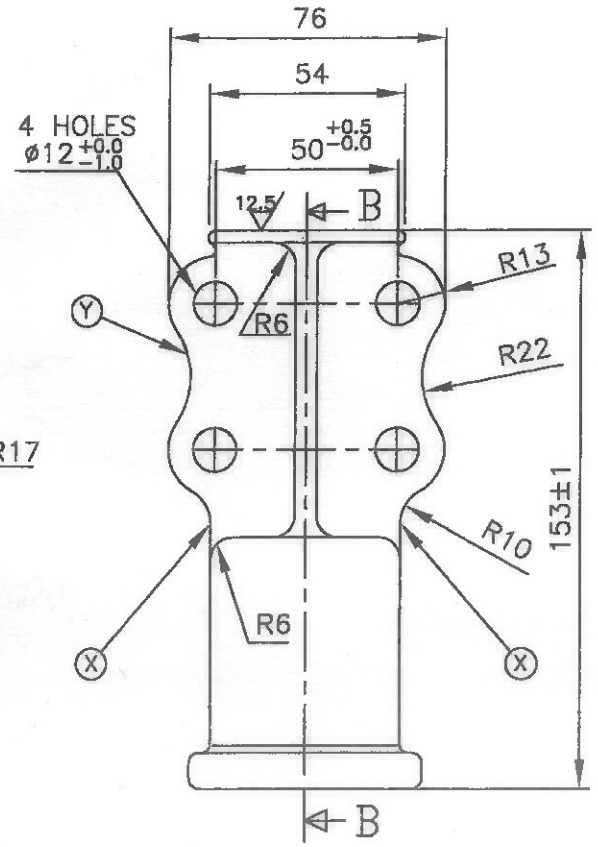

NOTES:

1. MATERIAL: MCI GRADE BM 350, TO IS:14329–1995 OR S.G.IRON Gr.400/15 OF IS: 1865–1991
2. GENERAL TOLERANCE AS PER IS:8349–1977 FOR MCI & IS–8350–1977 FOR SGI.
3. MINIMUM BREAKING STRENGTH 8500 kgf.
4. GALVANISING:MINIMUM MASS OF ZINC COATING 1000gms/sq.m.
5. GALVANISING SURFACE MUST BE SMOOTH. ALL CORNERS & SHARP EDGES TO BE ROUNDED OFF.
6. MARKINGS OF METAL FITTING MANUFACTURER MONOGRAM TO BE PROVIDED IN PROJECTED FORM WITH 6mm LETTERS HEIGHT AT (Y)
7. MARKINGS: 'YEAR OF MANUFACTURE" AND "BHEL' TO BE PROVIDED IN PROJECTED FORM WITH 6 mm LETTERS AT (X)
8. MPI TEST TO BE CARRIED OUT TO ALL METAL FITTINGS.
9. THE BORE OF METAL FITTING SHOULD BE MAINTAINED AT MAXIMUM 25 MICRONS SURFACE ROUGHNESS.
10. ALL DIMENSIONS ARE AFTER GALVANISING.
11. GALVANISATION CONFORMS TO RDSO SPECIFICATION NO.ETI/OHE/13(4/84) WITH A & C SLIP 1 to 4.
12. MACHINING 'M' TO BE MACHINED SMOOTH WHERE SHOWN AFTER GALVANISING

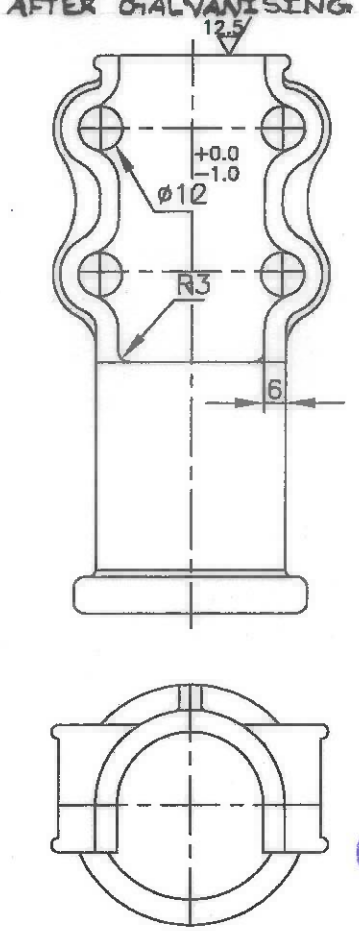

CONTROLLED COPY

FERROUS PARTS ARE HOT–DIP GALVANIZED (EXCEPT FE–MALE THREADS) AS PER IS: 2629 TESTS CONFORM TO IS: 2633 / IEC – 383 / BS 729

BHARAT HEAVY ELECTRICALS LTD.,
ELECTROPORCELAINS DIVISION
BANGALORE – 560 012

	NAME	SIGN	DATE
DRN	SANGAMESH		30.04.2019
CHD	N.CHIKKANNA		30.04.19
APPD	PENMI K		30.04.2019

REV	DATE	ALTERED / CHECKED	REV	DATE	ALTERED / CHECKED	REV	DATE	ALTERED / CHECKED

DEPT	GRADE OF TOL DIM	SCALE	WEIGHT (kg)	REF TO ASSY.DRG	ITEM No.	No.OF ITEMS
CODE	C/M/F	N T S	1.7 (Approx)	3 987 05 32100		

TITLE: TUBESIDE METAL FITTING FOR BRACKET COMPOSITE INSULATOR

CARD CODE

DRAWING No. 3 987 05 32121 REV. 00

No.OF SHEETS

SUPERSEDES DRG. No.

SHT.24 SIZE A3 420 x 297