COPYRIGHT AND CONFIDENTIAL
The information on this document is the property of BHARAT HEAVY ELECTRICALS LIMITED.
It must not be used directly or indirectly in any way detrimental to the interest of the company.

HOSE FLEXBLE METAL SS

1.0 DESCRIPTION

1.1 A flexible annular corrugated metal hose for use in gas turbine piping system. Flowing medium will be fuel gas, liquid fuel air or steam.

2.0 APPLICABLE DOCUMENTS

2.1 The following documents of the issue in effect on the date of invitation for bids or requests for quotes form a part of this ordering sheet to the extent specified herein.

A. Welding: American Welding Society (AWS)

B. NDT: American Society For Non-Destructive testing(ANST)

C. ASME Boiler and Pressure Vessel Code Sec-VIII.

D. ANSI B-31.1 Power Piping

E. Recommended Practice for Radio Graphic Testing ASTM E 94

F. Society of Automotive Engrs.-SAE-J518C-For 'O' –Ring

G. Pipe Fitting: ASTM A-403 (SS)

2.2 Outline Drawing see sheet 5 & up

3.0 SPECIFICATION

3.1 DESIGN REQUIREMENTS

3.1.1 CONSTRUCTION:

Heavy weight annular corrugated metal hose with multiple layers of external reinforcing braid. See table (Sht-5) for wall thickness, Pitch (Flexonics type 402H double braided) and working pressure as per variant table

3.1.2 MATERIAL

MATERIAL hose and braid-304L,316L,321L or 347 stainless steel in any combination

3.1.3 Nominal hose I.D.-As per variant table

3.1.4 Minimum Hose Live length- As per variant table

3.1.5 Maximum Working Pressure- As per variant table

3.1.6 Maximum Working Pressure-500° F.

RESTRICTED USE
BHEL-HYD EDAS
Nov Sat 14 15:22 2015
This Drawing is printed from Engineering Digital Archive System (EDAS).
Therefore signatures are not essentially required.

COPYRIGHT AND CONFIDENTIAL
The information on this document is the property of BHARAT HEAVY ELECTRICALS LIMITED.
It must not be used directly or indirectly in any way detrimental to the interest of the company.

3.1.7 ARMOR

When armor is specified (As per variant table) It will be stainless steel interlocked hose type positioned over the hose braid and welded at each end. The fabricated process must position the armor over the braid, weld one end and then pressurize the hose to extend it to its maximum length prior to welding the other end of armor. Tack welding, as a minimum, must be accomplished in the pressurized condition, after which finish welding can be done either in the pressurized or un pressurized conditions.

3.1.8 PERFORMANCE

Hose to be hydrostatically tested at supplier plant to pressure at room temperature (refer variant table for test pressure)

3.1.9 All piping matl. Shall confirm to ASTM A-312(SS)

3.1.10 All bellows used in flexible hose assemble shall confirms to ASTM A-269/ with maximum rock well hardness of Rb90

3.1.11 All weld joints to be full penetration but welded using GTAW root pass with consumable insert. All welds shall be subjected to 10% x-ray examination at random 100% DPT for all joints.

3.1.12 Complete hose assembly shall be flexible enough to take minimum bend radius specified in variant table.

3.1.13 Design burst pressure of hose assembly shall be minimum 4 times the design pressure. Type tests details qualifying design shall be submitted along with offer.

4.0 MATERIAL SOURCING

Vendor shall clearly indicate the sourcing details of assemblies and components in the offer. All components shall be sourced from reputed original manufactures only. This will be subjected to BHEL review during technical evaluation.

RESTRICTED USE
Nov Sat 14 15:22 2015
This Drawing is printed from Engineering Digital Archive System (EDAS).
Therefore signatures are not essentially required.

COPYRIGHT AND CONFIDENTIAL
The information on this document is the property of BHARAT HEAVY ELECTRICALS LIMITED.
It must not be used directly or indirectly in any way detrimental to the interest of the company.

5. SPECIAL INSTRUCTIONS

5.1 QUALITY ASSURANCE

Vendor shall submit detailed QA plan along with offer.

All material will be delivered in a clean and usable condition. Opening will be securely covered against entry of foreign material where appropriate.

5.2 Marking and packing for dispatch

5.2.1 Packing shall be accomplished in accordance with acceptable commercial pratices otherwise indicated in the purchase order or quotation request.

5.2.2 All containers shall be identified with BHEL Material code no. BHEL Purchase order no., Drawing number and part number and the vendor packing list and reference numbers. Each container shall contain three packing lists, listing all contents of the particular container with one copy attached in a secure manner to the outside. Each part will be identified and keyed to the packing list

6. DATA REQUIREMENT

6.1 The following list indicated the required drawing and documents to be furnished for BHEL's review, along with offer.

a. Outline drawings

b. Design parameters and technical data sheets.

c. List of loose parts and assembly instructions, if applicable.

d. Quality assurance plan.

RESTRICTED USE
Nov Sat 14 15:22 2015
This Drawing is printed from Engineering Digital Archive System (EDAS).
Therefore signatures are not essentially required.

COPYRIGHT AND CONFIDENTIAL
The information on this document is the property of BHARAT HEAVY ELECTRICALS LIMITED.
It must not be used directly or indirectly in any way detrimental to the interest of the company.

CONVERSION FACTORS

Apply to pressure rating for elevated temperatures

TEMPERATURE °F	MATERIAL: STAINLESS STEEL	STEEL	MONEL
70	1.00	1.00	1.00
150	.97	.99	.93
200	.94	.97	.90
250	.92	.96	.87
300	.88	.93	.83
350	.86	.91	.82
400	.83	.87	.79
450	.81	.86	.77
500	.78	.81	.73
600	.74	.74	.72
700	.70	.66	.71
800	.66	.52	.70
900	.62	.50	
1000	.60		
1100	.58		
1200	.85		
1300	.50		
1400	.44		
1500	.40		

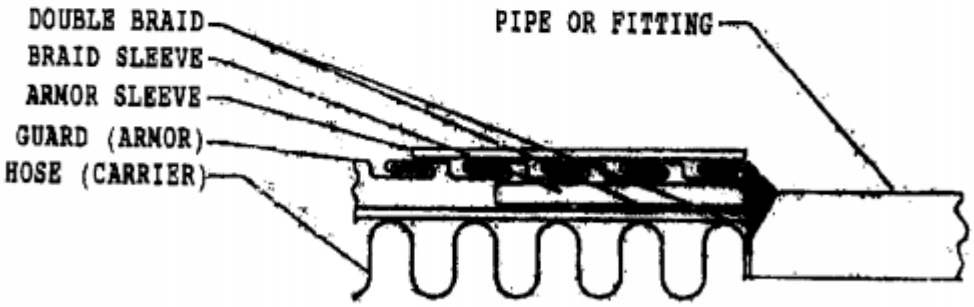

HOSE OR CARRIER ID IS TO CONFORM TO THE ID OF SCHEDULE 40 PIPE.

NOTE: When a braid sleeve is used in conjunction with armor in sizes 1/2, 3/4, 1, 1 1/4, 1 1/2, and 2, it is optional when armor can be sized to fit the braid OD providing a mechanically sound cap weld at each end of assembly.

RESTRICTED USE
Nov Sat 14 15:22 2015
This Drawing is printed from Engineering Digital Archive System (EDAS).
Therefore signatures are not essentially required.

PRODUCT STANDARD
HYDERABAD
GT ENGINEERING

HOSE ID	HOSE OD	WALL THK	HOSE PITCH PER IN	BRAID STRUCTURE PICK/WIRES PER PICK/WIRE DIA T-321 STN STL	BRAIDS 40H	402H	40M	402X	TUBE T-316	T-321	
											SINGLE BRAID WORKING PRESS @70°F-PSI
8.00	9.06	.025	2.58	96 X 17 X .025	X				X		275
10.00	11.19	.020	2.58	96 X 21 X .025			X			X	165
12.00	13.25	.020	2.58	96 X 29 x .025			X			X	155
12.00	13.25	.025	2.58	96 X 29 X .025	X				X		212
											DOUBLE BRAID WORKING PRESS @70°F-PSI
.50	.84	.016	8	24 X 8 X .0126		X			X		2355
.50	.84	.016	10	48 X 4 X .016				X	X		3600
.75	1.21	.020	6.16	48 X 6 X .0126		X			X		1650
.75	1.21	.020	8	48 X 4 X .024				X	X		3550
1.00	1.53	.020	5.16	48 X 7 X .0126		X			X		1165
1.00	1.53	.020	6.66	48 X 4 X .024				X	X		2800
1.25	1.86	.025	4.75	48 X 9 X .0126		X			X		980
1.25	1.86	.025	5.75	48 X 6 X .024				X	X		2480
1.50	2.19	.025	4.75	48 X 8 X .016		X			X		1000
1.50	2.19	.025	5.75	48 X 8 X .024				X	X		2200
2.00	2.83	.025	3.58	48 X 11 X .016		X			X		810
2.00	2.83	.025	4.58	48 X 9 X .024				X	X		1675
2.50	3.00	.020	5.33	48 X 8 X .024		X			X		1030
3.00	3.57	.020	4.66	48 X 9 X .024		X			X		820
4.00	4.72	.020	3.58	48 X 9 X .024		X			X		515
5.00	5.86	.025	3.08	48 X 18 X .024		X			X		610
6.00	7.00	.025	2.58	48 X 18 X .024		X			X		430
8.00	9.56	.032	2.58	96 X 17 X .025		X			X		320
8.00	9.56	.032	2.58	96 X 17 X .032		X				X	502
10.00	11.19	.025	2.58	96 x 21 x .025		X			X		264
12.00	13.25	.020	6.44	96 x 29 x .025		X			X		205
											TRIPLE BRAID WORKING PRESS @70°F-PSI
8.00	9.85	.032	2.58	96 X 17 X .025				X		X	669

NOTE: OUTER BRAID GUARDE (ARMOR)-INTERLOCKED
304 LSS WITH THICKNESS TO 0.012 INCH.

COPYRIGHT AND CONFIDENTIAL
The information on this document is the property of BHARAT HEAVY ELECTRICALS LIMITED.
It must not be used directly or indirectly in any way detrimental to the interest of the company.

RESTRICTED USE
Nov Sat 14 15:22 2015
This Drawing is printed from Engineering Digital Archive System (EDAS).
Therefore signatures are not essentially required.

COPYRIGHT AND CONFIDENTIAL
The information on this document is the property of BHARAT HEAVY ELECTRICALS LIMITED.
It must not be used directly or indirectly in any way detrimental to the interest of the company.

VARIANT TABLE

Var. No.	BHEL Mat code	Description	GE REF No	Remarks/PGMA
1	GT9754741018	HOSE, FLEXIBLE SS 2" SCH 40	385A6299P001	35541
2	GT9754741026	HOSE, FLEXIBLE SS 2" SCH 40	385A6299P002	35541
3	GT9754741034	HOSE, FLEXIBLE SS 2" SCH 40	385A6299P003	35541
4	GT9754741042	HOSE, FLEXIBLE SS 2" SCH 40	385A6299P004	35541
5	GT9754741050	HOSE, FLEXIBLE SS 2" SCH 40	385A6299P005	35541
6	GT9754741069	HOSE, FLEXIBLE SS 2" SCH 40	385A6299P006	35541
7	GT9754741077	HOSE, FLEXIBLE SS 2" SCH 40	385A6299P007	35541
8	GT9754741085	HOSE, FLEXIBLE SS 2" SCH 40	385A6299P008	35541
9	GT9754741093	HOSE, FLEXIBLE SS 2" SCH 40	385A6299P009	35541
10	GT9754741107	HOSE, FLEXIBLE SS 2" SCH 40	385A6299P010	35541
11	GT9754741115	HOSE, FLEXIBLE SS 1" SCH80	385A6299P011	35541
12	GT9754741123	HOSE, FLEXIBLE SS 1" SCH80	385A6299P012	35541
13	GT9754741131	HOSE, FLEXIBLE SS 1" SCH80	385A6299P013	35541
14	GT9754741140	HOSE, FLEXIBLE SS 1" SCH80	385A6299P014	35541
15	GT9754741158	HOSE, FLEXIBLE SS 1" SCH80	385A6299P015	35541
16	GT9754741166	HOSE, FLEXIBLE SS 1" SCH80	385A6299P016	35541
17	GT9754741174	HOSE, FLEXIBLE SS 1" SCH80	385A6299P017	35541
18	GT9754741182	HOSE, FLEXIBLE SS 1" SCH80	385A6299P018	35541
19	GT9754741190	HOSE, FLEXIBLE SS 1" SCH80	385A6299P019	35541
20	GT9754741204	HOSE, FLEXIBLE SS 1 1/2" SCH80	385A6299P020	35541
21	GT9754741212	HOSE, FLEXIBLE SS 1 1/2" SCH80	385A6299P021	35541
22	GT9754741220	HOSE, FLEXIBLE SS 1 1/2" SCH80	385A6299P022	35541
23	GT9754741239	HOSE, FLEXIBLE SS 1 1/2" SCH80	385A6299P023	35541
24	GT9754741247	HOSE, FLEXIBLE SS 1 1/2" SCH80	385A6299P024	35541
25	GT9754741255	HOSE, FLEXIBLE SS 1 1/2" SCH80	385A6299P025	35541
26	GT9754741263	HOSE, FLEXIBLE SS 1 1/2" SCH80	385A6299P026	35541
27	GT9754741271	HOSE, FLEXIBLE SS 1 1/2" SCH80	385A6299P027	35541
28	GT9754741280	HOSE, FLEXIBLE SS 2" SCH 40	385A6299P028	35541
29	GT9754741298	HOSE, FLEXIBLE SS 2" SCH 40	385A6299P029	35541
30	GT9754741301	HOSE, FLEXIBLE SS 2" SCH 40	385A6299P030	35541
31	GT9754741310	HOSE, FLEXIBLE SS 2" SCH 40	385A6299P031	35541
32	GT9754741328	HOSE, FLEXIBLE SS 2" SCH 40	385A6299P032	35541
33	GT9754741336	HOSE, FLEXIBLE SS 2" SCH 40	385A6299P033	35541
34	GT9754741344	HOSE, FLEXIBLE SS 2" SCH 40	385A6299P034	35541
35	GT9754741352	HOSE, FLEXIBLE SS 2" SCH 40	385A6299P035	35541
36	GT9754741360	HOSE, FLEXIBLE SS 2" SCH 40	385A6299P036	35541
37	GT9754741379	HOSE, FLEXIBLE SS 2" SCH 40	385A6299P037	35541
38	GT9754741387	HOSE, FLEXIBLE SS 2" SCH 40	385A6299P038	35541
39	GT9754741395	HOSE, FLEXIBLE SS 6" #150	395A3637P003	35507
40	GT9754741409	HOSE, FLEXIBLE SS 6" #300	395A3637P006	35507

RESTRICTED USE
Nov Sat 14 15:22 2015
This Drawing is printed from Engineering Digital Archive System (EDAS).
Therefore signatures are not essentially required.

41	GT9754741417	HOSE, FLEXIBLE SS 1"	134A4374P001	35531
42	GT9754741425	HOSE, FLEXIBLE SS 8" #300	134A4410P001	35532/35567

Var. No.	BHEL Mat code	Description	GE REF No	Remarks/PGMA
43	GT9754741433	HOSE, FLEXIBLE SS 4" #300	134A4410P002	35532/35567
44	GT9754741441	HOSE, FLEXIBLE SS 4" #300	134A4410P003	35532/35567
45	GT9754741450	HOSE, FLEXIBLE SS 4" #300	134A4410P004	35532/35567

COPYRIGHT AND CONFIDENTIAL
The information on this document is the property of BHARAT HEAVY ELECTRICALS LIMITED.
It must not be used directly or indirectly in any way detrimental to the interest of the company.

RESTRICTED USE
Nov Sat 14 15:22 2015
This Drawing is printed from Engineering Digital Archive System (EDAS).
Therefore signatures are not essentially required.

COPYRIGHT AND CONFIDENTIAL
The information on this document is the property of BHARAT HEAVY ELECTRICALS LIMITED.
It must not be used directly or indirectly in any way detrimental to the interest of the company.

BHEL VAR NO-01,02,03,04

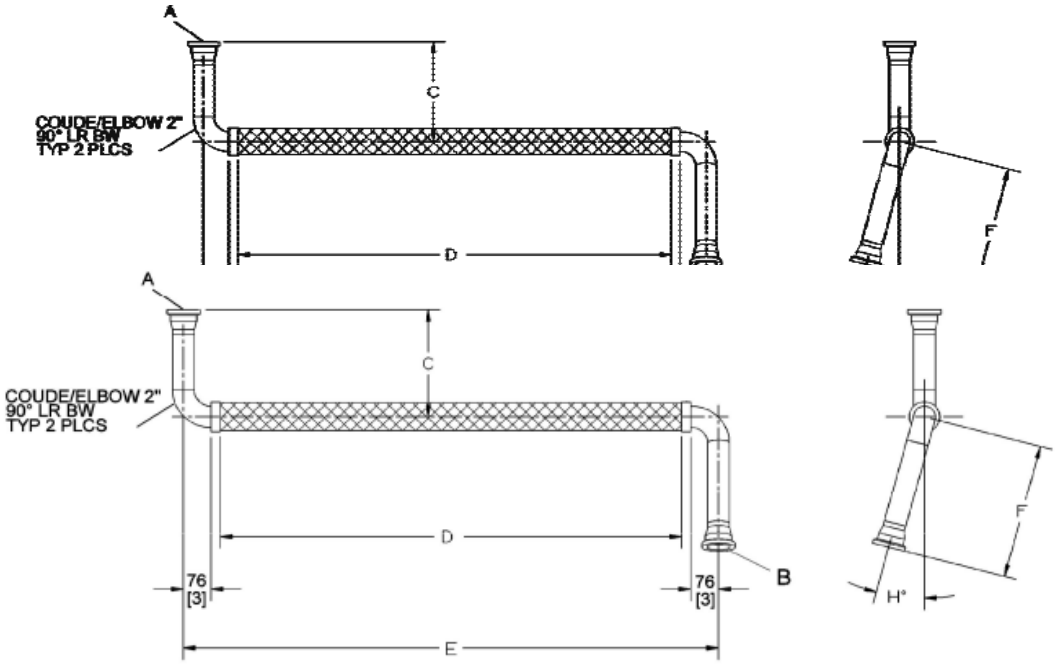

Part N°		P001	P002	P003	P004
MLI		0962	0962	0962	0962
Current diameter		2"	2"	2"	2"
C		[12.00]	[11.10]	[15.31]	[17.08]
D		[50.24]	[49.25]	[49.37]	[47.24]
E		[58.26]	[57.24]	[57.36]	[57.24]
F		[15.31}	[17.00]	[12.00]	[17.00]
H		14.75°	5.32°	21.26°	5.32°
Hub BW "A"- "B"		2" Stainless Steel 304L	2" Stainless Steel 304L	2" Stainless Steel 304L	2" Stainless Steel 304L
Pipe materials		Stainless Steel 304L sch 40 S	Stainless Steel 304L sch 40 S	Stainless Steel 304L sch 40 S	Stainless Steel 304L sch 40 S
Pressure/Temperature of operation Air (bar, °C)		19 bars to 460°C	19 bars to 460°C	19 bars to 460°C	19 bars to 460°C
Pressure/Temperature of operation Gas (bar, °C)		34,5 bars à 224°C	34,5 bars à 224°C	34,5 bars à 224°C	34,5 bars à 224°C
Flow direction		From "A" to "B"	From "A" to "B"	From "A" to "B"	From "A" to "B"
Fluide nature		Gas	Gas	Gas	Gas
Flow speed (m/s)		45.72	45.72	45.72	45.72
X-Ray analysis (code GE-P8A-AG3)		100% radio	100% radio	100% radio	100% radio
Protection	Liner	NO	NO	NO	NO
	Amor	YES - SST	YES - SST	YES - SST	YES - SST
PED		Group 1Cat. II	Group 1Cat. II	Group 1Cat. II	Group 1Cat. II

Part N°	P101	P102	P103	P104
	Same as P001 except 316L SST	Same as P002 except 316L SST	Same as P003 except 316L SST	Same as P004 except 316L SST

RESTRICTED USE
Nov Sat 14 15:22 2015
This Drawing is printed from Engineering Digital Archive System (EDAS).
Therefore signatures are not essentially required.

BHEL VAR NO-01,02,03,04

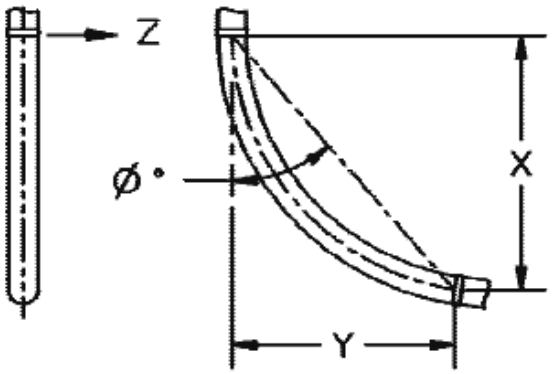

FIGURE 1

MOVEMENT

Part	Condition	"X"	"Y"	"Z"	"Ø" Degré
P001	INSTALLED	[50.78]	[8.58]	0	9.61°
	OPERATION	[51.61]	[8.31]	[-0.10]	
P002	INSTALLED	[49.61]	[9.29]	0	10.65°
	OPERATION	[49.88]	[9.09]	0	
P003	INSTALLED	[43.11]	[5.51]	0	7.25°
	OPERATION	[43.50]	[5.30]	[-0.20]	
P004	INSTALLED	[48.58]	[8.31]	0	10.65°
	OPERATION	[48.90]	[8.11]	0	

COPYRIGHT AND CONFIDENTIAL
The information on this document is the property of BHARAT HEAVY ELECTRICALS LIMITED.
It must not be used directly or indirectly in any way detrimental to the interest of the company.

Ref. Doc

RESTRICTED USE
Nov Sat 14 15:22 2015
This Drawing is printed from Engineering Digital Archive System (EDAS).
Therefore signatures are not essentially required.

COPYRIGHT AND CONFIDENTIAL
The information on this document is the property of BHARAT HEAVY ELECTRICALS LIMITED.
It must not be used directly or indirectly in any way detrimental to the interest of the company.

BHEL VAR NO-05,06,07

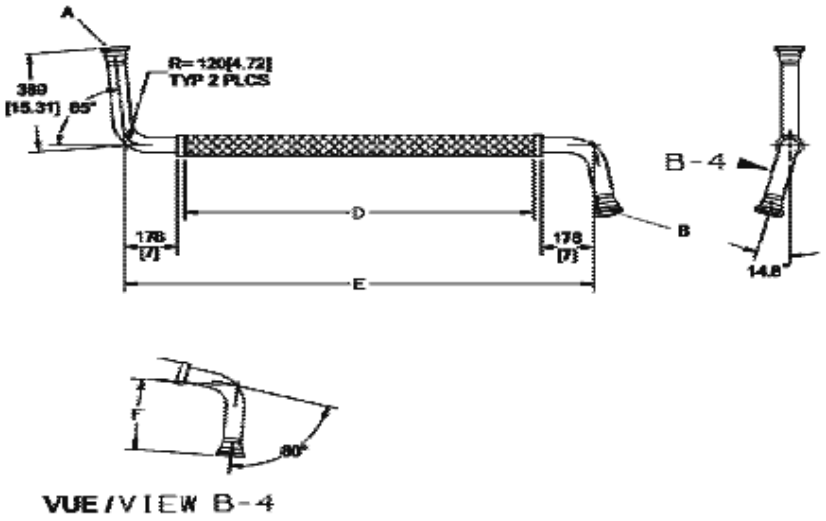

Port N°		P005	P006	P007
MU		0962	0962	0962
Current diameter		2"	2"	2"
D		[40.47]	[40.47]	[37.48]
E		[56.50]	[56.50]	[53.50]
F		[10.00]	[10.00]	[12.00]
Hub BW "A" - "B"		2" Stainless Steel 304L	2" Stainless Steel 304L	2" Stainless Steel 304L
Pipe materials		Stainless Steel 304L sch 40 S	Stainless Steel 304L sch 40 S	Stainless Steel 304L sch 40 S
Pressure/Temperature of operation Air (bar, °C)		19 bars to 460°C	19 bars to 460°C	19 bars to 460°C
Pressure/Temperature of operation Gas (bar, °C)		34,5 bars à 224°C	34,5 bars à 224°C	34,5 bars à 224°C
Flow direction		From "A" to "B"	From "A" to "B"	From "A" to "B"
Fluide nature		Gas	Gas	Gas
Flow speed (m/s)		45.72	45.72	45.72
X-Ray analysis (code GE-PBA-AG3)		100% radio	100% radio	100% radio
Protection	Liner	NO	NO	NO
	Amor	YES-SST	YES-SST	YES-SST
PED		Group 1Cat. II	Group 1Cat. II	Group 1Cat. II

Port N°	P105	P106	P107
	Same as P005 except 316L SST	Same as P006 except 316L SST	Same as P007 except 316L SST

RESTRICTED USE
Nov Sat 14 15:22 2015
This Drawing is printed from Engineering Digital Archive System (EDAS).
Therefore signatures are not essentially required.

BHEL VAR NO-05,06,07

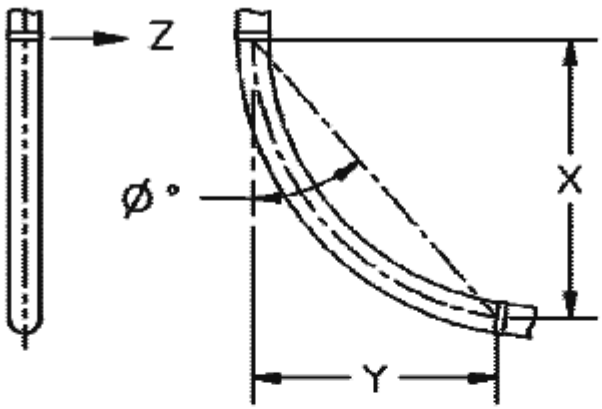

FIGURE 1

MOVEMENT

Part.	Condition	"X"	"Y"	"Z"	"Ø" Degré
P005	INSTALLED	[40.51]	[10.20]	0	14.11°
	OPERATION	[41.18]	[10.20]	[-0.30]	
P006	INSTALLED	[49.41]	[12.40]	0	14.11°
	OPERATION	[49.68]	[12.20]	[0.10]	
P007	INSTALLED	[35.71]	[8.58]	0	13.49°
	OPERATION	[36.30]	[8.58]	[-0.30]	

COPYRIGHT AND CONFIDENTIAL
The information on this document is the property of BHARAT HEAVY ELECTRICALS LIMITED.
It must not be used directly or indirectly in any way detrimental to the interest of the company.

RESTRICTED USE
Nov Sat 14 15:22 2015
This Drawing is printed from Engineering Digital Archive System (EDAS).
Therefore signatures are not essentially required.

COPYRIGHT AND CONFIDENTIAL
The information on this document is the property of BHARAT HEAVY ELECTRICALS LIMITED.
It must not be used directly or indirectly in any way detrimental to the interest of the company.

BHEL VAR NO-08,09,10

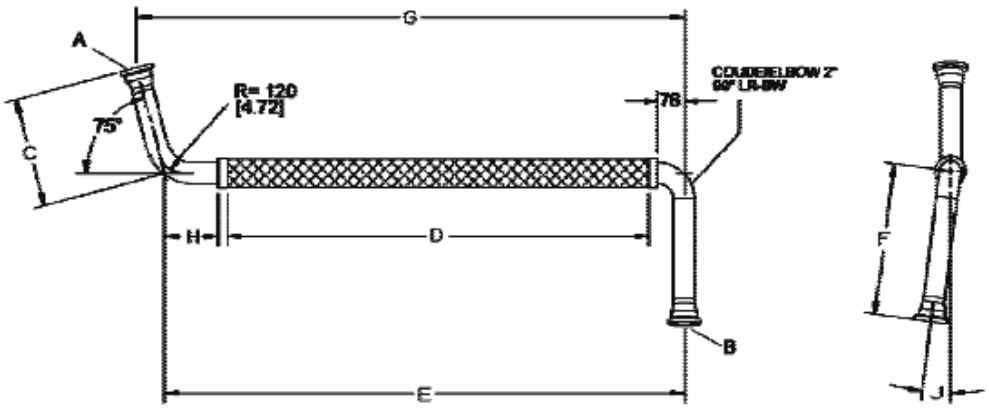

Part N°		P008	P009	P010
MLI		0962	0962	0962
Current diameter		2"	2"	2"
C		[13.25]	[13.00]	[10.00]
D		[47.13]	[48.11]	[42.87]
E		[58.15]	[60.12]	[54.88]
F		[17.00]	[17.00]	[15.31]
G		[61.30]	[63.23]	[57.20]
H		[5.98]	[7.00]	[7.00]
J		7.42°	7.16°	14.81°
Hub BW "A"- "B"		2"Stainless Steel 304L	2"Stainless Steel 304L	2"Stainless Steel 304L
Pipe materials		Stainless Steel 304L sch 40 S	Stainless Steel 304L sch 40 S	Stainless Steel 304L sch 40 S
Pressure/Temperature of operation Air [bar, °C]		19 bars to 460°C	19 bars to 460°C	19 bars to 460°C
Pressure/Temperature of operation Gas [bar, °C]		34,5 bars à 224°C	34,5 bars à 224°C	34,5 bars à 224°C
Flow direction		From "A" to "B"	From "A" to "B"	From "A" to "B"
Fluide nature		Gas	Gas	Gas
Flow speed [m/s]		45.72	45.72	45.72
X-Ray analysis [code GE-P8A-AG3]		100% radio	100% radio	100% radio
Protection	Liner	NO	NO	NO
	Armor	YES-SST	YES-SST	YES-SST
PED		Group 1Cat. II	Group 1Cat. II	Group 1Cat. II

Part N°	P108	P109	P110
	Same as P008 except 316L SST	Same as P009 except 316L SST	Same as P010 except 316L SST

RESTRICTED USE
Nov Sat 14 15:22 2015
This Drawing is printed from Engineering Digital Archive System (EDAS).
Therefore signatures are not essentially required.

BHEL VAR NO-08,09,10

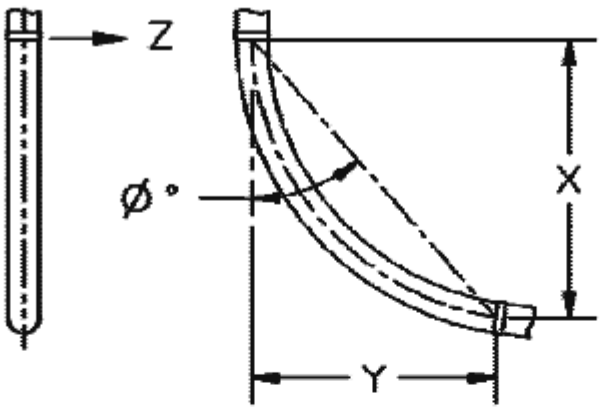

FIGURE 1

MOVEMENT

Part.	Condition	"X"	"Y"	"Z"	"Ø" Degré
P008	INSTALLED	[45.06]	[14.41]	0	17.71°
	OPERATION	[45.96]	[14.41]	[-0.30]	
P009	INSTALLED	[45.79]	[15.12]	0	18.27°
	OPERATION	[46.69]	[15.12]	[-0.40]	
P010	INSTALLED	[39.37]	[13.70]	0	19.12°
	OPERATION	[40.00]	[13.58]	[-0.30]	

COPYRIGHT AND CONFIDENTIAL
The information on this document is the property of BHARAT HEAVY ELECTRICALS LIMITED.
It must not be used directly or indirectly in any way detrimental to the interest of the company.

RESTRICTED USE
Nov Sat 14 15:22 2015
This Drawing is printed from Engineering Digital Archive System (EDAS).
Therefore signatures are not essentially required.

COPYRIGHT AND CONFIDENTIAL
The information on this document is the property of BHARAT HEAVY ELECTRICALS LIMITED.
It must not be used directly or indirectly in any way detrimental to the interest of the company.

BHEL VAR NO-11,12,13,14

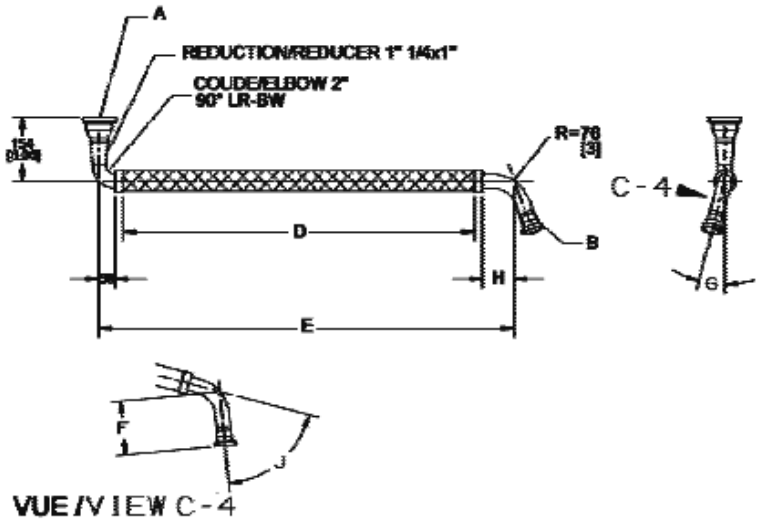

Port N°		P011	P012	P013	P014
MEI		0962	0962	0962	0962
Current diameter		1"	1"	1"	1"
D		[33.23]	[31.22]	[33.23]	[33.86]
E		[39.25]	[39.49]	[39.25]	[39.88]
F		[5.12]	[10.00]	[5.12]	[5.00]
G		14.58°	3.41°	34.57°	23.10°
H		[3.00]	[5.24]	[3.00]	[3.00]
J		70°	75.90°	70°	70°
Hub BW "A"		1" 1/4 Stainless Steel 304L	1" 1/4 Stainless Steel 304L	1" 1/4 Stainless Steel 304L	1" 1/4 Stainless Steel 304L
Hub BW "B"		1"Stainless Steel 304L	1"Stainless Steel 304L	1"Stainless Steel 304L	1"Stainless Steel 304L
Pipe materials		Stainless Steel 304L sch 80 S	Stainless Steel 304L sch 80 S	Stainless Steel 304L sch 80 S	Stainless Steel 304L sch 80 S
Pressure/Temperature of operation Air (bar, °C)		19 bars to 460°C	19 bars to 460°C	19 bars to 460°C	19 bars to 460°C
Pressure/Temperature of operation Gas (bar, °C)		34,5 bars à 224°C	34,5 bars à 224°C	34,5 bars à 224°C	34,5 bars à 224°C
Flow direction		From "A" to "B"	From "A" to "B"	From "A" to "B"	From "A" to "B"
Fluide nature		Gas	Gas	Gas	Gas
Flow speed (m/s)		45.72	45.72	45.72	45.72
X-Ray analysis (code GE-PBA-AG3)		100% radio	100% radio	100% radio	100% radio
Protection	Liner	NO	NO	NO	NO
	Amor	YES-SST	YES-SST	YES-SST	YES-SST
PED		Group 1 art. 3.3	Group 1 art. 3.3	Group 1 art. 3.3	Group 1 art. 3.3
Port N°		P111	P112	P113	P114
		Same as P011 except 316L SST	Same as P012 except 316L SST	Same as P013 except 316L SST	Same as P014 except 316L SST

RESTRICTED USE
Nov Sat 14 15:22 2015
This Drawing is printed from Engineering Digital Archive System (EDAS).
Therefore signatures are not essentially required.

BHEL VAR NO-11,12,13,14

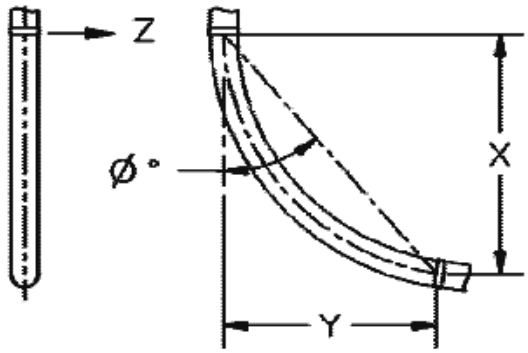

FIGURE 1

MOVEMENT

Part.	Condition	"X"	"Y"	"Z"	"Ø" Degré
P011	INSTALLED	[30.00]	[11.10]	0	20.30°
	OPERATION	[30.70]	[11.81]	[-0.10]	
P012	INSTALLED	[28.19]	[10.59]	0	20.64°
	OPERATION	[28.00]	[10.70]	[-0.30]	
P013	INSTALLED	[30.00]	[11.10]	0	20.30°
	OPERATION	[30.31]	[11.10]	[-0.40]	
P014	INSTALLED	[32.06]	[7.72]	0	13.46°
	OPERATION	[32.06]	[7.48]	[-0.10]	

COPYRIGHT AND CONFIDENTIAL
The information on this document is the property of BHARAT HEAVY ELECTRICALS LIMITED.
It must not be used directly or indirectly in any way detrimental to the interest of the company.

RESTRICTED USE
Nov Sat 14 15:22 2015
This Drawing is printed from Engineering Digital Archive System (EDAS).
Therefore signatures are not essentially required.

COPYRIGHT AND CONFIDENTIAL
The information on this document is the property of BHARAT HEAVY ELECTRICALS LIMITED.
It must not be used directly or indirectly in any way detrimental to the interest of the company.

BHEL VAR NO-15,16,17,18,19

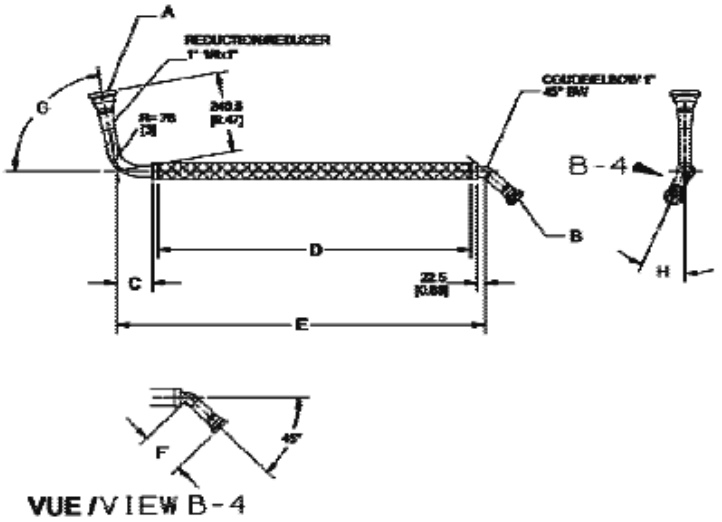

Part N°		P015	P016	P017	P018	P019
MU		0962	0962	0962	0962	0962
Current diameter		1"	1"	1"	1"	1"
C		[3.97]	[3.97]	[3.97]	[3.00]	[3.00]
D		[35.35]	[35.51]	[35.75]	[28.23]	[29.96]
E		[41.73]	[41.89]	[42.12]	[33.62]	[35.85]
F		[5.00]	[3.00]	[5.51]	[5.51]	[5.00]
G		80°	80°	80°	65°	65°
H		23.89°	24.2°	20.04°	6.52°	21.67°
Hub BW "A"		1"1/4 Stainless Steel 304L	1"1/4 Stainless Steel 304L	1"1/4 Stainless Steel 304L	1"1/4 Stainless Steel 304L	1"1/4 Stainless Steel 304L
Hub BW "B"		1"Stainless Steel 304L	1"Stainless Steel 304L	1"Stainless Steel 304L	1"Stainless Steel 304L	1"Stainless Steel 304L
Pipe materials		Stainless Steel 304L sch 80 S	Stainless Steel 304L sch 80 S	Stainless Steel 304L sch 80 S	Stainless Steel 304L sch 80 S	Stainless Steel 304L sch 80 S
Pressure/Temperature of operation Air (bar, °C)		19 bars to 460°C	19 bars to 460°C	19 bars to 460°C	19 bars to 460°C	19 bars to 460°C
Pressure/Temperature of operation Gas (bar, °C)		34,5 bars à 224°C	34,5 bars à 224°C	34,5 bars à 224°C	34,5 bars à 224°C	34,5 bars à 224°C
Flow direction		From "A" to "B"	From "A" to "B"	From "A" to "B"	From "A" to "B"	From "A" to "B"
Fluide nature		Gas	Gas	Gas	Gas	Gas
Flow speed (m/s)		45.72	45.72	45.72	45.72	45.72
X-Ray analysis (code GE-P8A-AG3)		100% radio	100% radio	100% radio	100% radio	100% radio
Protection	Liner	NO	NO	NO	NO	NO
	Amor	YES-SST	YES-SST	YES-SST	YES-SST	YES-SST
PED		Group 1 art. 3.3	Group 1 art. 3.3	Group 1 art. 3.3	Group 1 art. 3.3	Group 1 art. 3.3

Part N°	P115	P116	P117	P118	P119
	Same as P015 except 316L SST	Same as P016 except 316L SST	Same as P017 except 316L SST	Same as P018 except 316L SST	Same as P019 except 316L SST

RESTRICTED USE
Nov Sat 14 15:22 2015
This Drawing is printed from Engineering Digital Archive System (EDAS).
Therefore signatures are not essentially required.

BHEL VAR NO-15,16,17,18,19

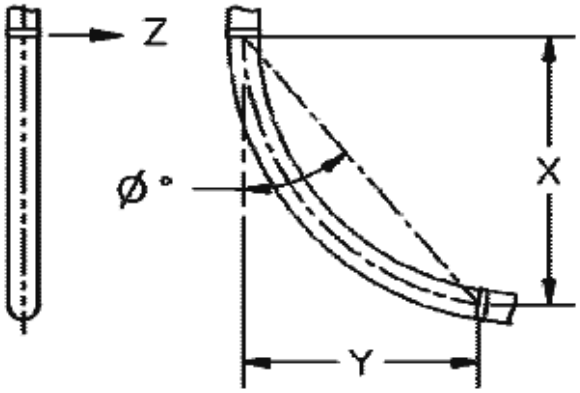

FIGURE 1

MOVEMENT

Part.	Condition	"X"	"Y"	"Z"	"Ø" Degré
P015	INSTALLED	[31.41]	[12.40]	0	21.52°
	OPERATION	[31.89]	[12.40]	[0.20]	
P016	INSTALLED	[31.49]	[12.00]	0	20.80°
	OPERATION	[32.20]	[12.00]	[-0.50]	
P017	INSTALLED	[30.00]	[15.31]	0	27.03°
	OPERATION	[30.51]	[15.90]	[-0.50]	
P018	INSTALLED	[24.40]	[11.69]	0	20.25°
	OPERATION	[25.12]	[12.08]	[-0.30]	
P019	INSTALLED	[27.99]	[7.72]	0	15.41°
	OPERATION	[28.30]	[7.72]	[-0.50]	

COPYRIGHT AND CONFIDENTIAL
The information on this document is the property of BHARAT HEAVY ELECTRICALS LIMITED.
It must not be used directly or indirectly in any way detrimental to the interest of the company.

RESTRICTED USE
Nov Sat 14 15:22 2015
This Drawing is printed from Engineering Digital Archive System (EDAS).
Therefore signatures are not essentially required.

BHEL VAR NO-20,21,22

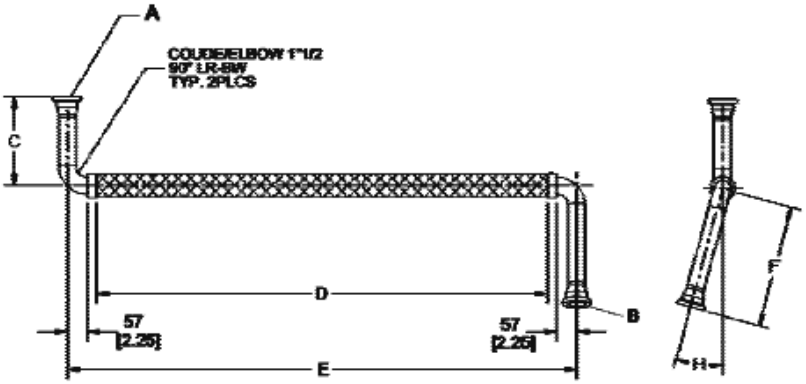

Part N°		P020	P021	P022
MU		0962	0962	0962
Current diameter		1"1/2	1"1/2	1"1/2
C		[10.00]	[16.75]	[13.74]
D		[50.63]	[44.01]	[53.86]
E		[57.13]	[50.51]	[60.39]
F		[13.74]	[9.47]	[10.53]
H		15.26°	9.46°	17.29°
Hub BW "A"- "B"		1"1/2 Stainless Steel 304L	1"1/2 Stainless Steel 304L	1"1/2 Stainless Steel 304L
Pipe materials		Stainless Steel 304L sch 80 S	Stainless Steel 304L sch 80 S	Stainless Steel 304L sch 80 S
Pressure/Temperature of operation Air [bar, °C]		19 bars to 460°C	19 bars to 460°C	19 bars to 460°C
Pressure/Temperature of operation Gas [bar, °C]		34,5 bars à 224°C	34,5 bars à 224°C	34,5 bars à 224°C
Flow direction		From "A" to "B"	From "A" to "B"	From "A" to "B"
Fluidenature		Ga	Gas	Gas
Flow speed [m/s]		45.72	45.72	45.72
X-Ray analysis [code GE-P&A-AG3]		100% radio	100% radio	100% radio
Protection	Liner	NO	NO	NO
	Amor	YES-SST	YES-SST	YES-SST
PED		Group 1Cat. II	Group 1Cat. II	Group 1Cat. II

Part N°	P120	P121	P122
	Same as P020 except 316L SST	Same as P021 except 316L SST	Same as P022 except 316L SST

COPYRIGHT AND CONFIDENTIAL
The information on this document is the property of BHARAT HEAVY ELECTRICALS LIMITED.
It must not be used directly or indirectly in any way detrimental to the interest of the company.

RESTRICTED USE
Nov Sat 14 15:22 2015
This Drawing is printed from Engineering Digital Archive System (EDAS).
Therefore signatures are not essentially required.

BHEL VAR NO-20,21,22

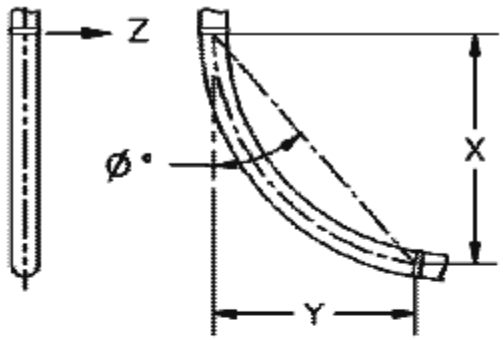

FIGURE 1

MOVEMENT

Part.	Condition	"X"	"Y"	"Z"	"Ø" Degré
P020	INSTALLED	[49.29]	[9.49]	0	10.85°
	OPERATION	[49.80]	[9.80]	[0.10]	
P021	INSTALLED	[39.09]	[18.30]	0	10.49°
	OPERATION	[39.80]	[18.11]	[-0.30]	
P022	INSTALLED	[54.80]	[8.30]	0	8.65°
	OPERATION	[55.39]	[8.11]	[-0.40]	

COPYRIGHT AND CONFIDENTIAL
The information on this document is the property of BHARAT HEAVY ELECTRICALS LIMITED.
It must not be used directly or indirectly in any way detrimental to the interest of the company.

RESTRICTED USE
Nov Sat 14 15:22 2015
This Drawing is printed from Engineering Digital Archive System (EDAS).
Therefore signatures are not essentially required.

BHEL VAR NO-23,24,25

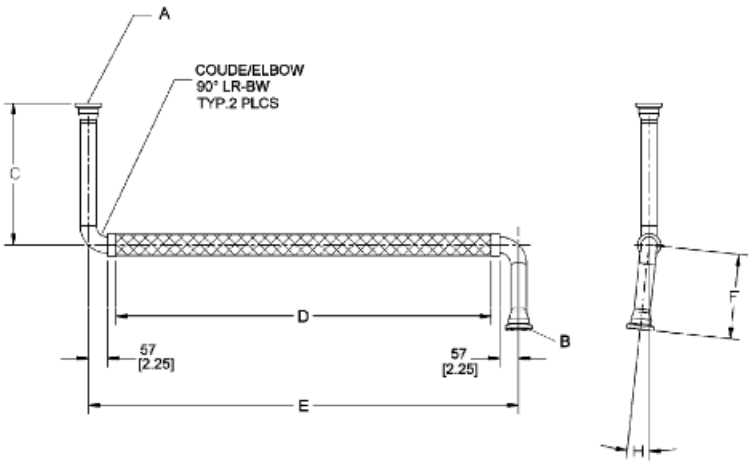

Part N°		P023	P024	P025
MLI		0962	0962	0962
Current diameter		1"1/2	1"1/2	1"1/2
C		[16.75]	[13.74]	[13.74]
D		[44.41]	[38.62]	[49.96]
E		[50.90]	[45.12]	[56.46]
F		[9.45]	[8.52]	[10.00]
H		6.05°	16.4°	22.24°
Hub BW "A"- "B"		1"1/2 Stainless Steel 304L	1"1/2 Stainless Steel 304L	1"1/2 Stainless Steel 304L
Pipe materials		Stainless Steel 304L sch 80 S	Stainless Steel 304L sch 80 S	Stainless Steel 304L sch 80 S
Pressure/Temperature of operation Air (bar, °C)		19 bars to 460°C	19 bars to 460°C	19 bars to 460°C
Pressure/Temperature of operation Gas (bar, °C)		34,5 bars à 224°C	34,5 bars à 224°C	34,5 bars à 224°C
Flow direction		From "A" to "B"	From "A" to "B"	From "A" to "B"
Fluide nature		Gas	Gas	Gas
Flow speed (m/s)		45.72	45.72	45.72
X-Ray analysis (code GE-P8A-AG3)		100% radio	100% radio	100% radio
Protection	Liner	NO	NO	NO
	Amor	YES-SST	YES-SST	YES-SST
PED		Group 1Cat. II	Group 1Cat. II	Group 1Cat. II

Part N°	P123	P124	P125
	Same as P023 ex-cept 316L SST	Same as P024 except 316L SST	Same as P025 except 316L SST

COPYRIGHT AND CONFIDENTIAL
The information on this document is the property of BHARAT HEAVY ELECTRICALS LIMITED.
It must not be used directly or indirectly in any way detrimental to the interest of the company.

RESTRICTED USE
Nov Sat 14 15:22 2015
This Drawing is printed from Engineering Digital Archive System (EDAS).
Therefore signatures are not essentially required.

BHEL VAR NO-23,24,25

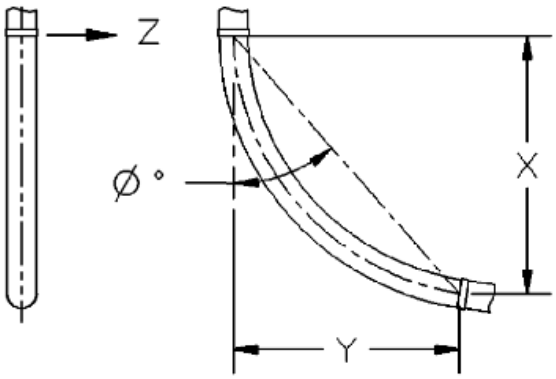

FIGURE 1

MOVEMENT

Part.	Condition	"X"	"Y"	"Z"	"Ø" Degré
P023	INSTALLED	[42.60]	[8.58]	0	11.46°
	OPERATION	[43.19]	[8.30]	[-0.30]	
P024	INSTALLED	[37.40]	[7.48]	0	11.31°
	OPERATION	[37.79]	[6.81]	[-0.20]	
P025	INSTALLED	[49.41]	[5.51]	0	6.4°
	OPERATION	[49.80]	[4.80]	[-0.40]	

COPYRIGHT AND CONFIDENTIAL
The information on this document is the property of BHARAT HEAVY ELECTRICALS LIMITED.
It must not be used directly or indirectly in any way detrimental to the interest of the company.

RESTRICTED USE
Nov Sat 14 15:22 2015
This Drawing is printed from Engineering Digital Archive System (EDAS).
Therefore signatures are not essentially required.

BHEL VAR NO-26

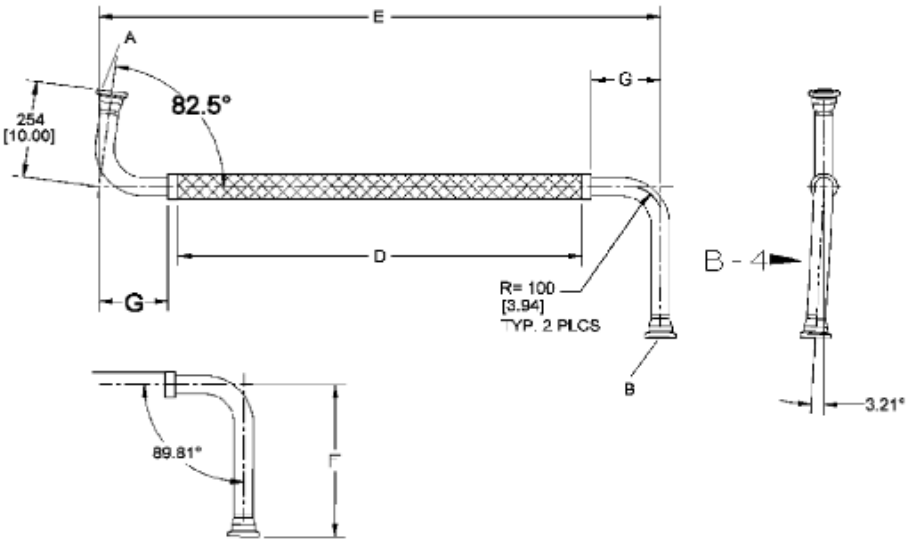

VUE / VIEW B - 4

Part N°		P026
MLI		0962
Current diameter		1"1/2
D		[40.94]
E		[56.97]
F		[15.75]
G		[7.00]
Hub BW "A"- "B"		1"1/2 Stainless Steel 304L
Pipe materials		Stainless Steel 304L sch 80 S
Pressure/Temperature of operation Air (bar, °C)		19 bars to 460°C
Pressure/Temperature of operation Gas (bar, °C)		34,5 bars à 224°C
Flow direction		From "A" to "B"
Fluide nature		Gas
Flow speed (m/s)		45.72
X-Ray analysis (code GE-P8A-AG3)		100% radio
Protection	Liner	NO
	Amor	YES-SST
PED		Group 1Cat. II

Part N°	P126
	Same as P026 except 316L SST

COPYRIGHT AND CONFIDENTIAL
The information on this document is the property of BHARAT HEAVY ELECTRICALS LIMITED.
It must not be used directly or indirectly in any way detrimental to the interest of the company.

RESTRICTED USE
Nov Sat 14 15:22 2015
This Drawing is printed from Engineering Digital Archive System (EDAS).
Therefore signatures are not essentially required.

BHEL VAR NO-26

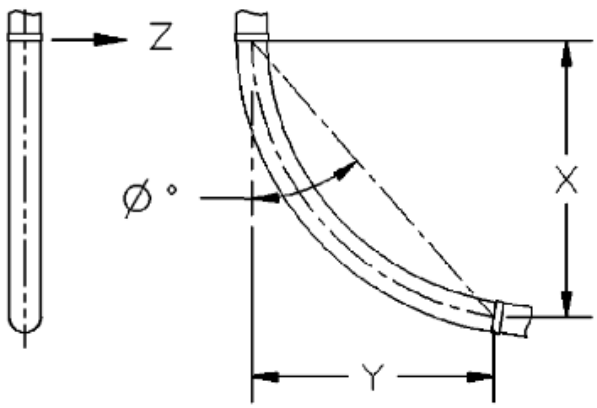

FIGURE 1

MOVEMENT

Part.	Condition	"X"	"Y"	"Z"	"Ø" Degré
P026	INSTALLED	[40.00]	[6.50]	0	9.16°
	OPERATION	[39.49]	[6.30]	[-0.20]	

COPYRIGHT AND CONFIDENTIAL
The information on this document is the property of BHARAT HEAVY ELECTRICALS LIMITED.
It must not be used directly or indirectly in any way detrimental to the interest of the company.

RESTRICTED USE
Nov Sat 14 15:22 2015
This Drawing is printed from Engineering Digital Archive System (EDAS).
Therefore signatures are not essentially required.

BHEL VAR NO-27

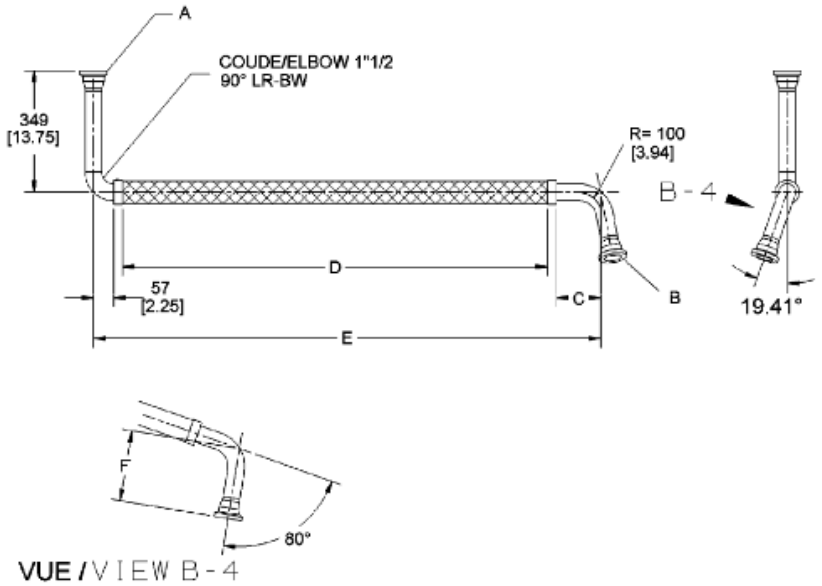

Part N°		P027
MLI		0962
Current diameter		1"1/2
C		[5.00]
D		[48.07]
E		[57.32]
F		[7.48]
Hub BW "A"- "B"		1"1/2 Stainless Steel
Pipe materials		Stainless Steel 304L sch 80 S
Pressure/Temperature of operation Air (bar, °C)		19 bars to60°C
Pressure/Temperature of operation Gas (bar, °C)		34,5 bars à 224°C
Flow direction		From "A" to "B"
Fluide nature		Gas
Flow speed (m/s)		45.72
X-Ray analysis (code GE-P8A-AG3)		100% radio
Protection	Liner	NO
	Amor	YES-SST
PED		Group 1Cat. II

Part N°	P127
	Same as P027 except 316L SST

COPYRIGHT AND CONFIDENTIAL
The information on this document is the property of BHARAT HEAVY ELECTRICALS LIMITED.
It must not be used directly or indirectly in any way detrimental to the interest of the company.

RESTRICTED USE
Nov Sat 14 15:22 2015
This Drawing is printed from Engineering Digital Archive System (EDAS).
Therefore signatures are not essentially required.

BHEL VAR NO-27

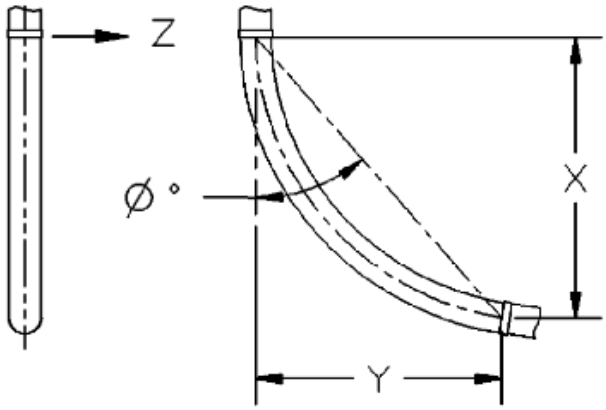

FIGURE 1

MOVEMENT

Part.	Condition	"X"	"Y"	"Z"	"Ø" Degré
P027	INSTALLED	[46.42]	[8.50]	0	10.38°
	OPERATION	[46.89]	[8.19]	[-0.40]	

COPYRIGHT AND CONFIDENTIAL
The information on this document is the property of BHARAT HEAVY ELECTRICALS LIMITED.
It must not be used directly or indirectly in any way detrimental to the interest of the company.

RESTRICTED USE
Nov Sat 14 15:22 2015
This Drawing is printed from Engineering Digital Archive System (EDAS).
Therefore signatures are not essentially required.

BHEL VAR NO-28,29,30

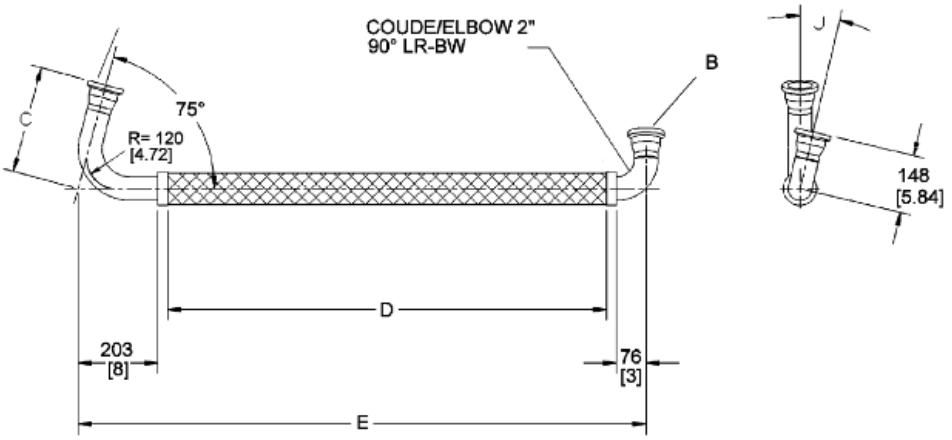

Part N°		P028	P029	P030
MLI		0962	0962	0962
Current diameter		2"	2"	2"
C		[10.75]	[10.00]	[8.74]
D		[44.05]	[46.06]	[43.50]
E		[57.04]	[59.05]	[56.50]
J		13.20°	19.05°	19.74°
Hub BW "A"- "B"		2" Stainless Steel 304L	2" Stainless Steel 304L	2" Stainless Steel 304L
Pipe materials		Stainless Steel 304L sch 40 S	Stainless Steel 304L sch 40 S	Stainless Steel 304L sch 40 S
Pressure/Temperature of operation Air (bar, °C)		19 bars to 460°C	19 bars to 460°C	19 bars to 460°C
Pressure/Temperature of operation Gas (bar, °C)		34,5 bars à 224°C	34,5 bars à 224°C	34,5 bars à 224°C
Flow direction		From "A" to "B"	From "A" to "B"	From "A" to "B"
Fluide nature		Gas	Gas	Gas
Flow speed (m/s)		45.72	45.72	45.72
X-Ray analysis (code GE-P8A-AG3)		100% radio	100% radio	100% radio
Protection	Liner	NO	NO	NO
	Amor	YES-SST	YES-SST	YES-SST
PED		Group 1Cat. II	Group 1Cat. II	Group 1Cat. II

Part N°	P128	P129	P130
	Same as P028 except 316L SST	Same as P029 except 316L SST	Same as P030 except 316L SST

COPYRIGHT AND CONFIDENTIAL
The information on this document is the property of BHARAT HEAVY ELECTRICALS LIMITED.
It must not be used directly or indirectly in any way detrimental to the interest of the company.

RESTRICTED USE
Nov Sat 14 15:22 2015
This Drawing is printed from Engineering Digital Archive System (EDAS).
Therefore signatures are not essentially required.

BHEL VAR NO-28,29,30

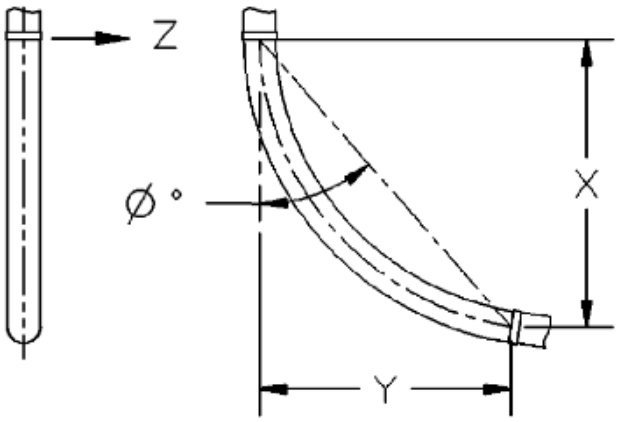

FIGURE 1

MOVEMENT

Part.	Condition	"X"	"Y"	"Z"	"Ø" Degré
P028	INSTALLED	[40.31]	[14.09]	0	19.30°
	OPERATION	[41.30]	[14.01]	[-1.81]	
P029	INSTALLED	[43.11]	[12.28]	0	15.93°
	OPERATION	[43.58]	[13.11]	[0.10]	
P030	INSTALLED	[41.69]	[8.11]	0	14.81°
	OPERATION	[42.71]	[7.71]	[-0.30]	

COPYRIGHT AND CONFIDENTIAL
The information on this document is the property of BHARAT HEAVY ELECTRICALS LIMITED.
It must not be used directly or indirectly in any way detrimental to the interest of the company.

RESTRICTED USE
Nov Sat 14 15:22 2015
This Drawing is printed from Engineering Digital Archive System (EDAS).
Therefore signatures are not essentially required.

BHEL VAR NO-31

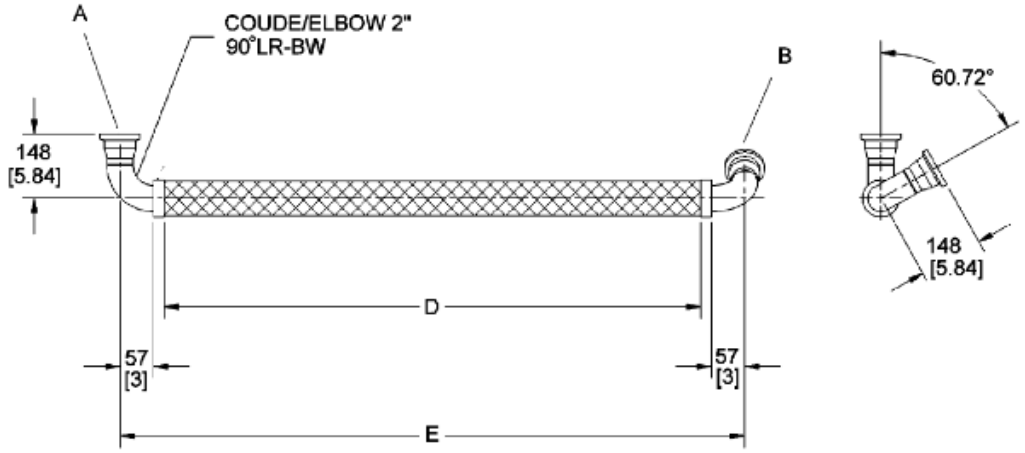

Part N°		P031
MLI		0962
Current diameter		2"
D		[48.78]
E		[56.81]
Hub BW "A"- "B"		2" Stainless Steel 304L
Pipe materials		Stainless Steel 304L sch 40 S
Pressure/Temperature of operation Air (bar, °C)		19 bars to 460°C
Pressure/Temperature of operation Gas (bar, °C)		34,5 bars à 224°C
Flow direction		From "A" to "B"
Fluide nature		Gas
Flow speed (m/s)		45.72
X-Ray analysis (code GE-P8A-AG3)		100% radio
Protection	Liner	NO
	Amor	YES-SST
PED		Group 1Cat. II

Part N°	P131
	Same as P031 except 316L SST

COPYRIGHT AND CONFIDENTIAL
The information on this document is the property of BHARAT HEAVY ELECTRICALS LIMITED.
It must not be used directly or indirectly in any way detrimental to the interest of the company.

RESTRICTED USE
Nov Sat 14 15:22 2015
This Drawing is printed from Engineering Digital Archive System (EDAS).
Therefore signatures are not essentially required.

BHEL VAR NO-31

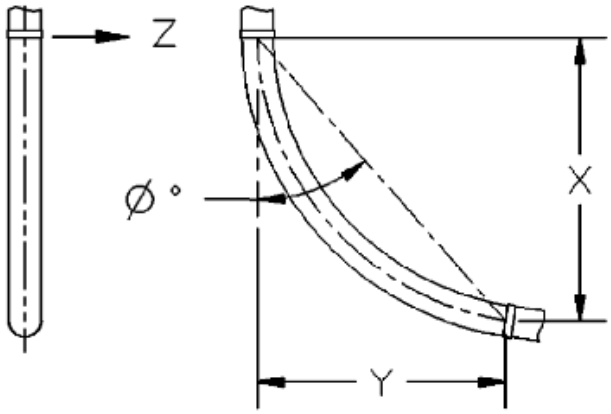

FIGURE 1

MOVEMENT

Part.	Condition	"X"	"Y"	"Z"	"Ø" Degré
P031	INSTALLED	[46.49]	[10.90]	0	13.20°
	OPERATION	[46.42]	[11.69]	[-0.20]	

COPYRIGHT AND CONFIDENTIAL
The information on this document is the property of BHARAT HEAVY ELECTRICALS LIMITED.
It must not be used directly or indirectly in any way detrimental to the interest of the company.

RESTRICTED USE
Nov Sat 14 15:22 2015
This Drawing is printed from Engineering Digital Archive System (EDAS).
Therefore signatures are not essentially required.

BHEL VAR NO-32

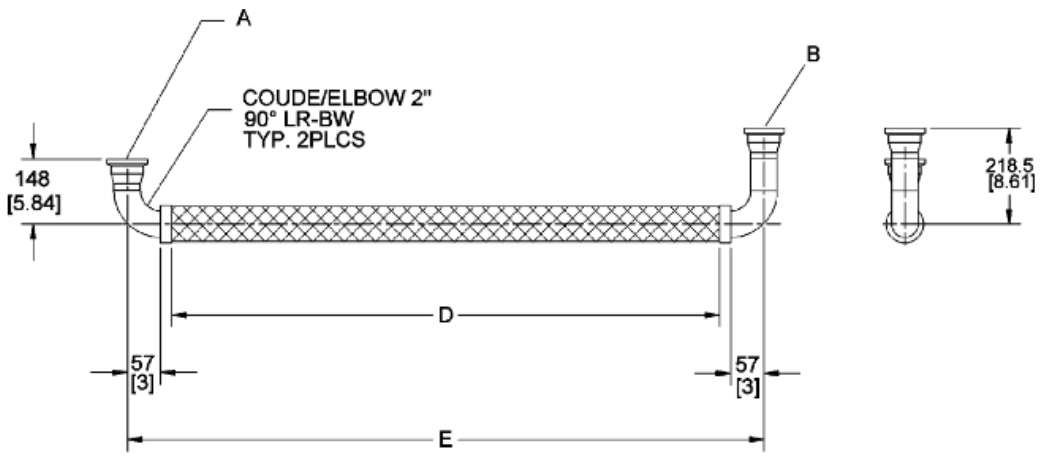

Part N°		P032
MLI		0962
Current diameter		2"
D		[48.74]
E		[57.24]
Hub BW "A"- "B"		2" Stainless Steel 304L
Pipe materials		Stainless Steel 304L sch 40 S
Pressure/Temperature of operation Air (bar, °C)		19 bars to 460°C
Pressure/Temperature of operation Gas (bar, °C)		34,5 bars à 224°C
Flow direction		From "A" to "B"
Fluide nature		Gas
Flow speed (m/s)		45.72
X-Ray analysis (code GE-P8A-AG3)		100% radio
Protection	Liner	NO
	Amor	YES-SST
PED		Group 1Cat. II

Part N°	P132
	Same as P032 ex-cept 316L SST

COPYRIGHT AND CONFIDENTIAL
The information on this document is the property of BHARAT HEAVY ELECTRICALS LIMITED.
It must not be used directly or indirectly in any way detrimental to the interest of the company.

RESTRICTED USE
Nov Sat 14 15:22 2015
This Drawing is printed from Engineering Digital Archive System (EDAS).
Therefore signatures are not essentially required.

BHEL VAR NO-32

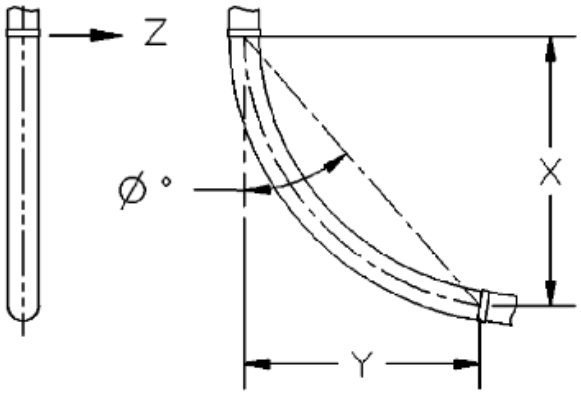

FIGURE 1

MOVEMENT

Part.	Condition	"X"	"Y"	"Z"	"Ø" Degré
P032	INSTALLED	[47.60]	[9.29]	0	11.02°
	OPERATION	[47.28]	[8.70]	[-0.20]	

COPYRIGHT AND CONFIDENTIAL
The information on this document is the property of BHARAT HEAVY ELECTRICALS LIMITED.
It must not be used directly or indirectly in any way detrimental to the interest of the company.

Ref. Doc

RESTRICTED USE
Nov Sat 14 15:22 2015
This Drawing is printed from Engineering Digital Archive System (EDAS).
Therefore signatures are not essentially required.

BHEL VAR NO-33,34

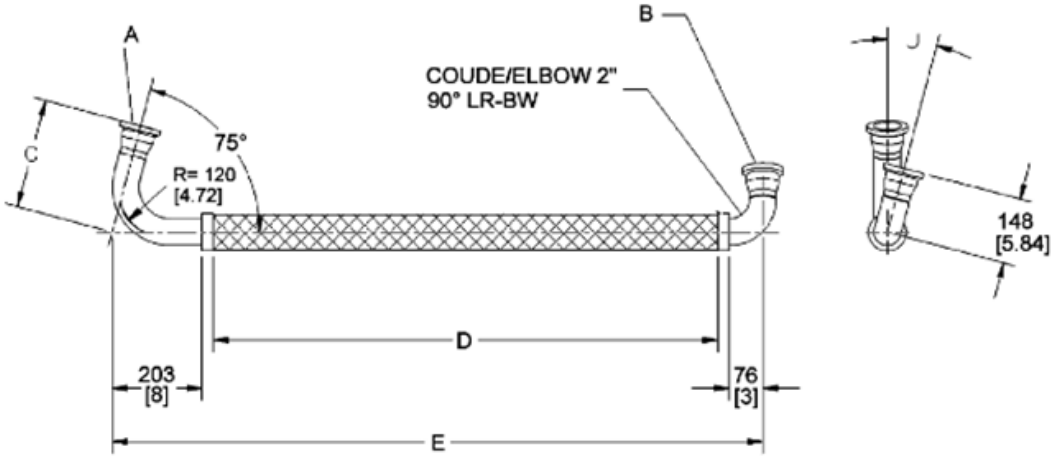

Part N°		P033	P034
MLI		0962	0962
Current diameter		2"	2"
C		[8.74]	[9.72]
D		[44.80]	[43.23]
E		[57.79]	[56.22]
J		14.78°	21.04°
Hub BW "A"- "B"		2" Stainless Steel 304L	2" Stainless Steel 304L
Pipe materials		Stainless Steel 304L sch 40 S	Stainless Steel 304L sch 40 S
Pressure/Temperature of operation Air (bar, °C)		19 bars to 460°C	19 bars to 460°C
Pressure/Temperature of operation Gas (bar, °C)		34,5 bars to 224°C	34,5 bars to 224°C
Flow direction		From "A" to "B"	From "A" to "B"
Fluide nature		Gas	Gas
Flow speed (m/s)		45.72	45.72
X-Ray analysis (code GE-P8A-AG3)		100% radio	100% radio
Protection	Liner	NO	NO
	Amor	YES-SST	YES-SST
PED		Group 1Cat. II	Group 1Cat. II

Part N°	P133	P134
	Same as P033 except 316L SST	Same as P034 except 316L SST

COPYRIGHT AND CONFIDENTIAL
The information on this document is the property of BHARAT HEAVY ELECTRICALS LIMITED.
It must not be used directly or indirectly in any way detrimental to the interest of the company.

RESTRICTED USE

Nov Sat 14 15:22 2015
This Drawing is printed from Engineering Digital Archive System (EDAS).
Therefore signatures are not essentially required.

BHEL VAR NO-33,34

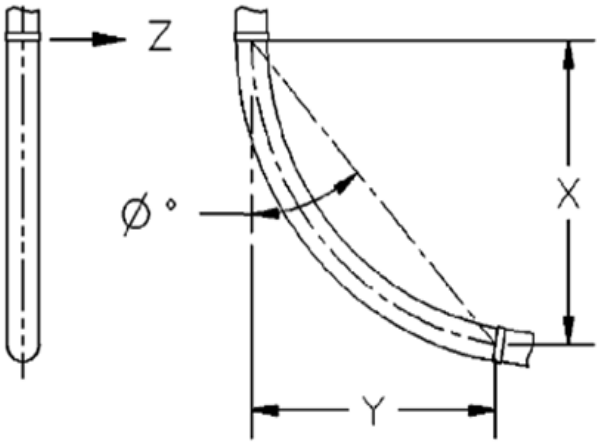

FIGURE 1

MOVEMENT

Part.	Condition	"X"	"Y"	"Z"	"Ø" Degré
P033	INSTALLED	[41.42]	[13.19]	0	19.21°
	OPERATION	[42.52]	[12.91]	[-0.30]	
P034	INSTALLED	[40.78]	[11.41]	0	15.63°
	OPERATION	[41.30]	[9.68]	[-0.30]	

COPYRIGHT AND CONFIDENTIAL
The information on this document is the property of BHARAT HEAVY ELECTRICALS LIMITED.
It must not be used directly or indirectly in any way detrimental to the interest of the company.

RESTRICTED USE
Nov Sat 14 15:22 2015
This Drawing is printed from Engineering Digital Archive System (EDAS).
Therefore signatures are not essentially required.

BHEL VAR NO-35,36,37,38

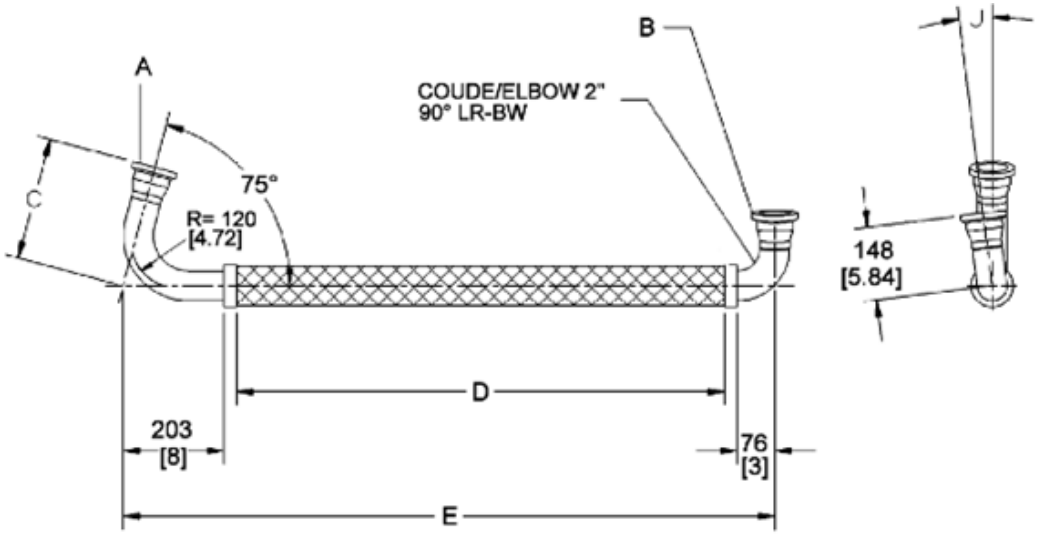

Part N°		P035	P036	P037	P038
MLI		0962	0962	0962	0962
Current diameter		2"	2"	2"	2"
C		[8.74]	[8.74]	[9.72]	[9.72]
D		[38.82]	[35.51]	[31.73]	[36.18]
E		[51.81]	[48.50]	[44.72]	[51.53]
J		7.05°	7.10°	7.03°	15.24°
Hub BW "A"- "B"		2" Stainless Steel 304L	2" Stainless Steel 304L	2" Stainless Steel 304L	2" Stainless Steel 304L
Pipe materials		Stainless Steel 304L sch 40 S	Stainless Steel 304L sch 40 S	Stainless Steel 304L sch 40 S	Stainless Steel 304L sch 40 S
Pressure/Temperature of operation Air (bar, °C)		19 bars to 460°C	19 bars to 460°C	19 bars to 460°C	19 bars to 460°C
Pressure/Temperature of operation Gas (bar, °C)		34,5 bars to 224°C	34,5 bars to 224°C	34,5 bars to 224°C	34,5 bars to 224°C
Flow direction		From "A" to "B"	From "A" to "B"	From "A" to "B"	From "A" to "B"
Fluide nature		Gas	Gas	Gas	Gas
Flow speed (m/s)		45.72	45.72	45.72	45.72
X-Ray analysis (code GE-P8A-AG3)		100% radio	100% radio	100% radio	100% radio
Protection	Liner	NO	NO		NO
	Amor	YES-SST	YES-SST		YES-SST
PED		Group 1Cat. II	Group 1Cat. II	Group 1Cat. II	Group 1Cat. II

Part N°	P135	P136	P137	P138
	Same as P035 except 316L SST	Same as P036 except 316L SST	Same as P037 except 316L SST	Same as P038 except 316L SST

COPYRIGHT AND CONFIDENTIAL
The information on this document is the property of BHARAT HEAVY ELECTRICALS LIMITED.
It must not be used directly or indirectly in any way detrimental to the interest of the company.

RESTRICTED USE

Nov Sat 14 15:22 2015
This Drawing is printed from Engineering Digital Archive System (EDAS).
Therefore signatures are not essentially required.

BHEL VAR NO-35,36,37,38

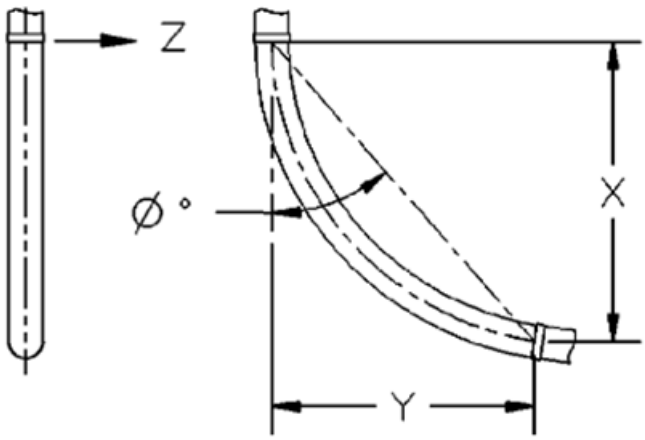

FIGURE 1

MOVEMENT

Part.	Condition	"X"	"Y"	"Z"	"Ø" Degré
P035	INSTALLED	[34.68]	[14.29]	0	22.38°
	OPERATION	[36.10]	[15.59]	[0.50]	
P036	INSTALLED	[31.89]	[13.00]	0	22.19°
	OPERATION	[33.11]	[12.71]	[0.10]	
P037	INSTALLED	[28.58]	[11.49]	0	21.96°
	OPERATION	[29.60]	[10.90]	0	
P038	INSTALLED	[35.51]	[12.00]	0	18.61°
	OPERATION	[36.41]	[11.10]	[0.10]	

COPYRIGHT AND CONFIDENTIAL
The information on this document is the property of BHARAT HEAVY ELECTRICALS LIMITED.
It must not be used directly or indirectly in any way detrimental to the interest of the company.

Ref. Doc

RESTRICTED USE
Nov Sat 14 15:22 2015
This Drawing is printed from Engineering Digital Archive System (EDAS).
Therefore signatures are not essentially required.

BHEL VAR NO-39

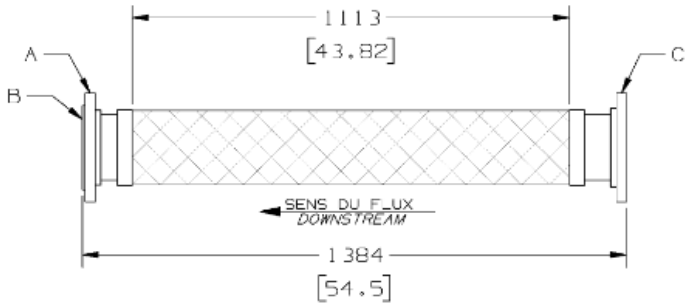

Part N°		P003
MLI		0909
Current diameter		6"
Pipe-lap joint Flange RF "A"		6" 150LBS SST 304L
Stub ends short BW "B"		6" LG 3,5" SST 304L
S.O Flange "C"		6" 150LBS SST 304L
Pipe materials		SST 304L sch. 40s
Pressure/Temperature of operation Air (bar, °C)		70 Psig at 520° F
Flow direction		From "C" to "A"
Fluide nature		Air
Flow speed (FPS)		120
X-Ray analysis (code GE-P8A-AG3)		5% radio
Protection	Liner	Yes-SST 304L
	Amor	Yes-SST 304L
PED		Cat. I

MOVEMENT

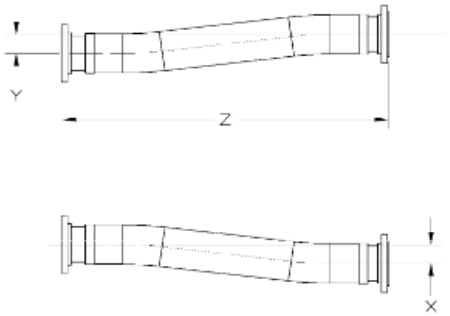

Part.	Position	"X" (inch)	"Y" (inch)	"Z" (inch)
P003	INSTALLED	[0.00]	[3.54]	[0.00]
	OPERATION	[.68]	[4.72]	[.36]

COPYRIGHT AND CONFIDENTIAL
The information on this document is the property of BHARAT HEAVY ELECTRICALS LIMITED.
It must not be used directly or indirectly in any way detrimental to the interest of the company.

RESTRICTED USE
Nov Sat 14 15:22 2015
This Drawing is printed from Engineering Digital Archive System (EDAS).
Therefore signatures are not essentially required.

BHEL VAR NO-40

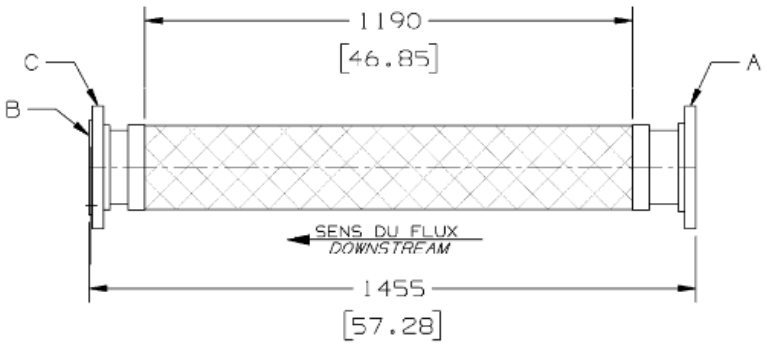

Part N°		P006
MLI		0909
Current diameter		6"
S.O Flange "A"		6" 300LBS SST 304L
Stub ends short BW "B"		6" LG 3,5" SST 304L
Pipe-lap joint Flange RF "C"		6" 300LBS SST 304L
Pipe materials		SST 304L sch. 40s
Pressure/Temperature of operation Air (bar, °C)		140 Psig at 705° F
Flow direction		From "A" to "C"
Fluide nature		Air
Flow speed (FPS)		140
X-Ray analysis (code GE-P8A-AG3)		5% radio
Protection	Liner	Yes-SST 304L
	Amor	Yes-SST 304L
PED		Cat. I

MOVEMENT

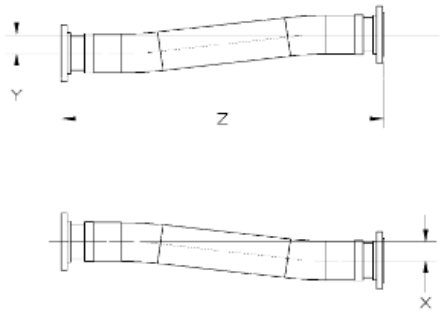

Part.	Position	"X" (inch)	"Y" (inch)	"Z" (inch)
P006	INSTALLED	[0.00]	[3.62]	[0.00]
	OPERATION	[.59]	[4.68]	[.24]

COPYRIGHT AND CONFIDENTIAL
The information on this document is the property of BHARAT HEAVY ELECTRICALS LIMITED.
It must not be used directly or indirectly in any way detrimental to the interest of the company.

RESTRICTED USE
Nov Sat 14 15:22 2015
This Drawing is printed from Engineering Digital Archive System (EDAS).
Therefore signatures are not essentially required.

BHEL VAR NO-41

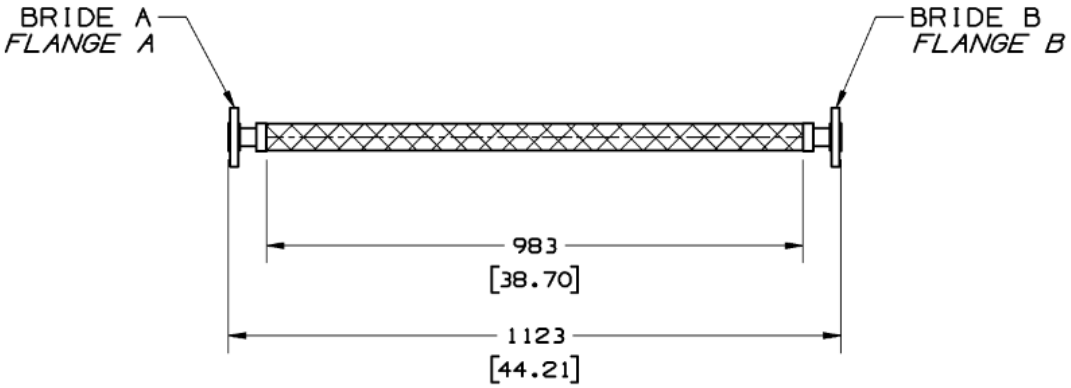

Part N°		P001
MLI		0915
Current diameter		1"
Dimensions		See layout
Flange A		1" - 150 Lbs Carbon Steel lapped flange with SST 304L stub end
Flange B		1" - 150 Lbs Carbon Steel lapped flange with SST 304L stub end
Pipe materials		stainless steel 304L sch 80
Pressure / Temperature of operation (bar,°C)		10.3 bars à 93°C
Fluid nature		Cooling Water
Flow speed (m/s)		3
X-ray analysis (code GE-P8A-AG3)		5% radio
Protection	Internal	NO
	External	YES
Maximum moving OFFSET (inch)		1
PED		CE Mark - Category 3.3

COPYRIGHT AND CONFIDENTIAL
The information on this document is the property of BHARAT HEAVY ELECTRICALS LIMITED.
It must not be used directly or indirectly in any way detrimental to the interest of the company.

RESTRICTED USE
Nov Sat 14 15:22 2015
This Drawing is printed from Engineering Digital Archive System (EDAS).
Therefore signatures are not essentially required.

BHEL VAR NO-42

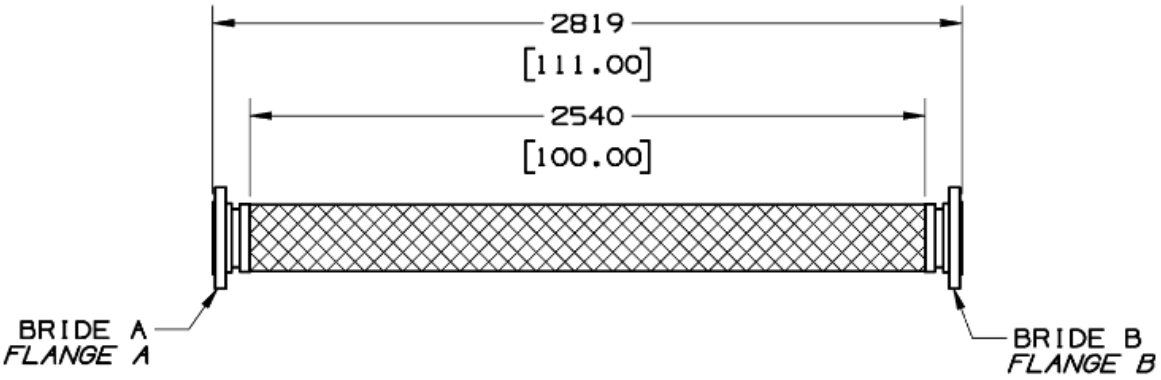

Part N°		P001
MLI		0924
Current diameter		8"
Dimensions		See layout
Flange A		8" - 300 Lbs Lbs SST 316 lapped flange with SST 316 stub end
Flange B		8" - 300 Lbs Lbs SST 316 lapped flange with SST 316 stub end
Pipe materials		stainless steel 304L sch 40S
Pressure / Temperature of operation (bar,°C)		19 bars to 460°C
Fluid nature		Air
Flow speed (m/s)		45.72
X-ray analysis (code GE-P8A-AG3)		5% radio
Protection	Internal	NO
	External	YES
Maximum moving Angle (deg)		134.7
PED		CE Mark - Cat III

COPYRIGHT AND CONFIDENTIAL
The information on this document is the property of BHARAT HEAVY ELECTRICALS LIMITED.
It must not be used directly or indirectly in any way detrimental to the interest of the company.

RESTRICTED USE
Nov Sat 14 15:22 2015
This Drawing is printed from Engineering Digital Archive System (EDAS).
Therefore signatures are not essentially required.

BHEL VAR NO-43

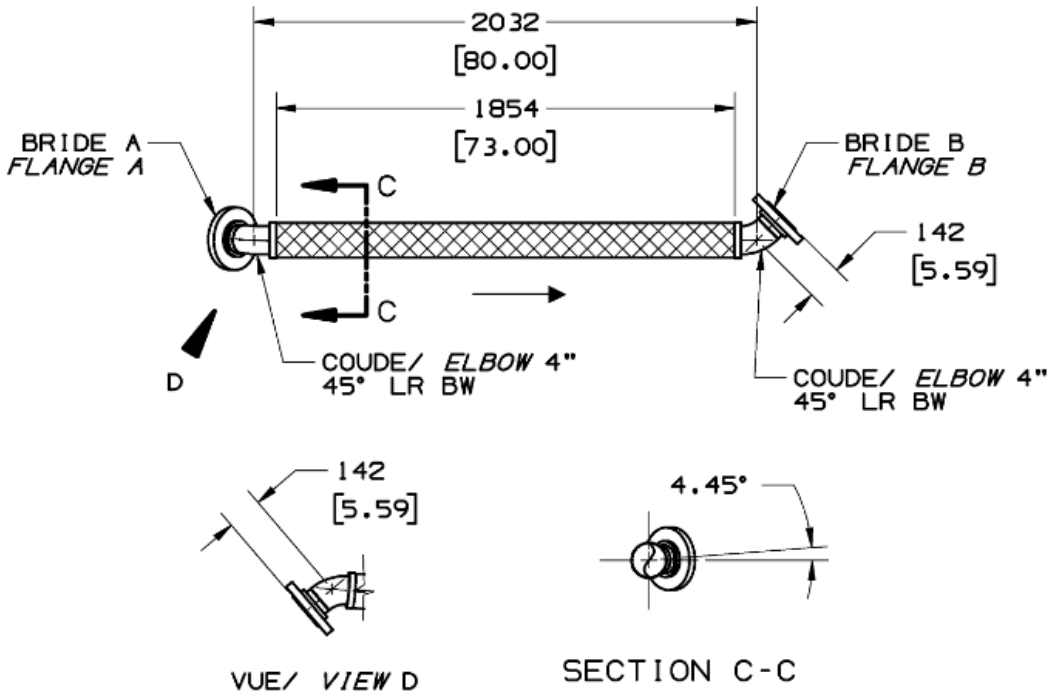

Part N°		P002
MLI		0924
Current diameter		4"
Dimensions		See layout
Flange A		4" - 300 Lbs Lbs SST 316 lapped flange with SST 316 stub end
Flange B		4" - 300 Lbs Lbs SST 316 lapped flange with SST 316 stub end
Pipe materials		stainless steel 304L sch 40S
Pressure / Temperature of operation (bar,°C)		19 bars to 460°C
Flow direction		From "A" to "B"
Fluid nature		Air
Flow speed (m/s)		22.86
X-ray analysis (code GE-P8A-AG3)		5% radio
Protection	Internal	NO
	External	YES
Maximum moving Angle (deg)		77.7
PED		CE Mark - Cat I

COPYRIGHT AND CONFIDENTIAL
The information on this document is the property of BHARAT HEAVY ELECTRICALS LIMITED.
It must not be used directly or indirectly in any way detrimental to the interest of the company.

Ref. Doc

RESTRICTED USE
Nov Sat 14 15:22 2015
This Drawing is printed from Engineering Digital Archive System (EDAS).
Therefore signatures are not essentially required.

BHEL VAR NO-44

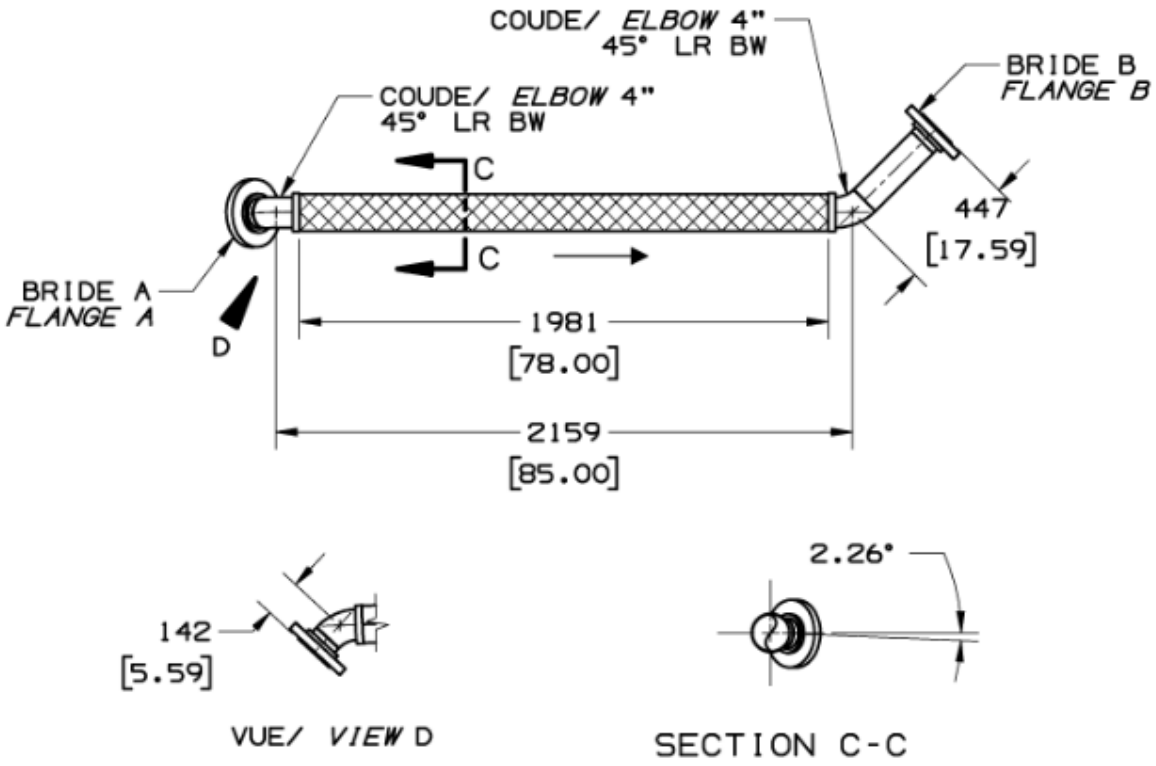

Part N°		P003
MLI		0924
Current diameter		4"
Dimensions		See layout
Flange A		4" - 300 Lbs Lbs SST 316 lapped flange with SST 316 stub end
Flange B		4" - 300 Lbs Lbs SST 316 lapped flange with SST 316 stub end
Pipe materials		stainless steel 304L sch 40S
Pressure / Temperature of operation (bar,°C)		19 bars to 460°C
Flow direction		From "A" to "B"
Fluid nature		Air
Flow speed (m/s)		22.86
X-ray analysis (code GE-P8A-AG3)		5% radio
Protection	Internal	NO
	External	YES
Maximum moving Angle (deg)		65.2
PED		CE Mark - Cat I

COPYRIGHT AND CONFIDENTIAL
The information on this document is the property of BHARAT HEAVY ELECTRICALS LIMITED.
It must not be used directly or indirectly in any way detrimental to the interest of the company.

RESTRICTED USE
Nov Sat 14 15:22 2015
This Drawing is printed from Engineering Digital Archive System (EDAS).
Therefore signatures are not essentially required.

BHEL VAR NO-45

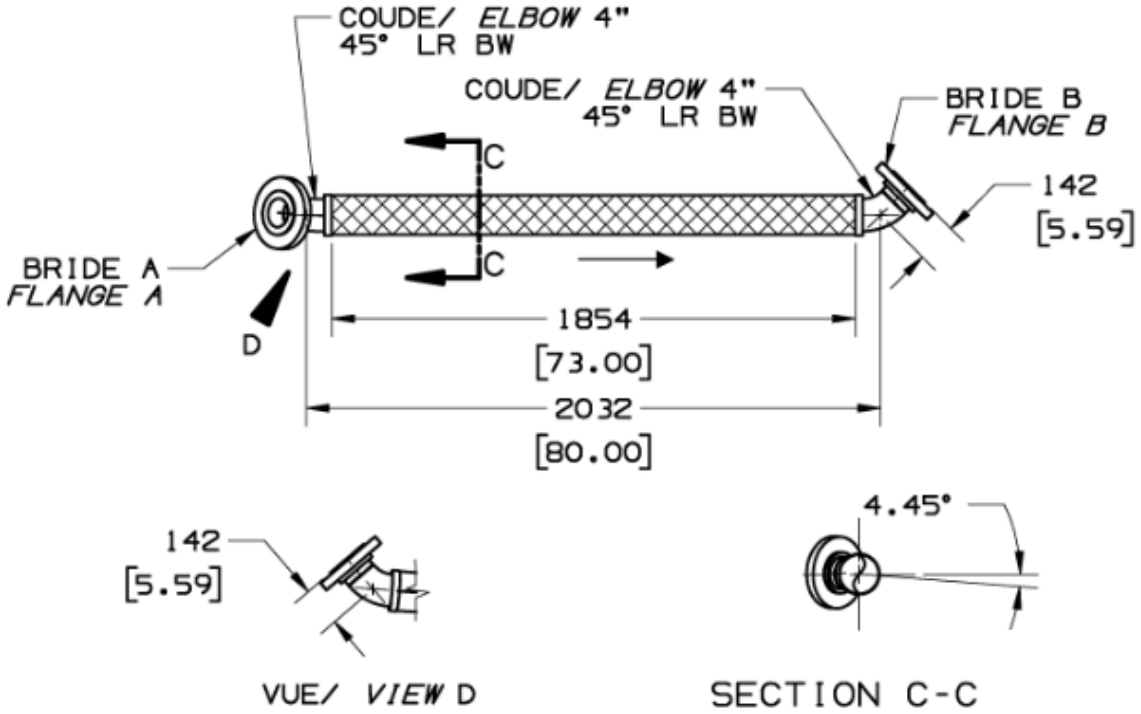

Part N°		P004
MLI		0924
Current diameter		4"
Dimensions		See layout
Flange A		4" - 300 Lbs Lbs SST 316 lapped flange with SST 316 stub end
Flange B		4" - 300 Lbs Lbs SST 316 lapped flange with SST 316 stub end
Pipe materials		stainless steel 304L sch 40S
Pressure / Temperature of operation (bar,°C)		19 bars to 460°C
Flow direction		From "A" to "B"
Fluid nature		Air
Flow speed (m/s)		22.86
X-ray analysis (code GE-P8A-AG3)		5% radio
Protection	Internal	NO
	External	YES
Maximum moving Angle (deg)		77.7
PED		CE Mark - Cat I

COPYRIGHT AND CONFIDENTIAL
The information on this document is the property of BHARAT HEAVY ELECTRICALS LIMITED.
It must not be used directly or indirectly in any way detrimental to the interest of the company.

Ref. Doc

RESTRICTED USE
Nov Sat 14 15:22 2015
This Drawing is printed from Engineering Digital Archive System (EDAS).
Therefore signatures are not essentially required.

RECORD OF REVISIONS

Rev. No.	Date	Revision Details	Revised By	Approved By
00	23.04.15	First made.	CHKK	AJH

COPYRIGHT AND CONFIDENTIAL
The information on this document is the property of BHARAT HEAVY ELECTRICALS LIMITED.
It must not be used directly or indirectly in any way detrimental to the interest of the company.

RESTRICTED USE
Nov Sat 14 15:22 2015
This Drawing is printed from Engineering Digital Archive System (EDAS).
Therefore signatures are not essentially required.